HOMA

潛水泵產品系列

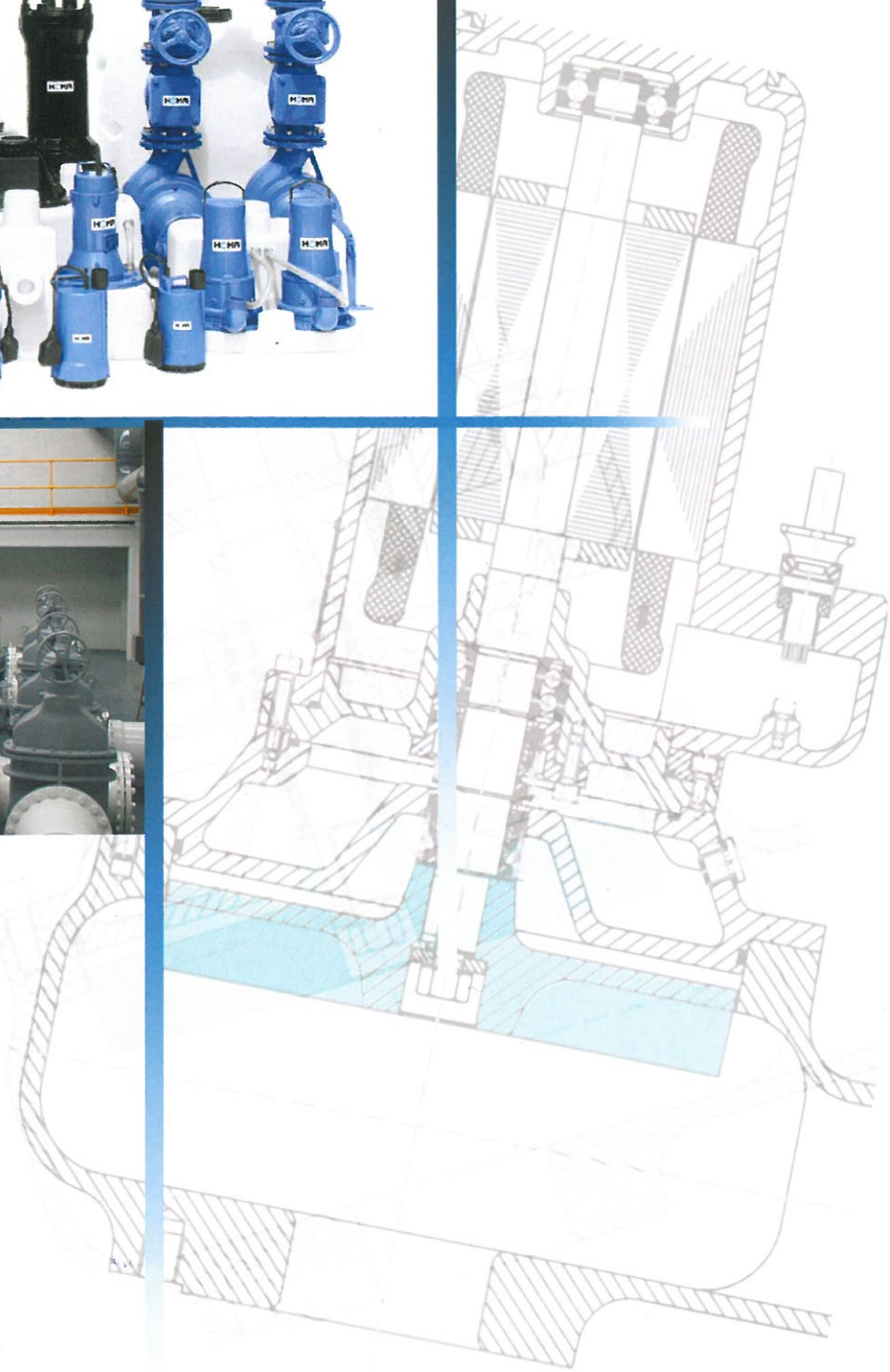

HOMA

Professional. Performance.
性能，源於專業

HOMA是一間擁有超過五十年製泵經驗，始於1946年的潛水泵製造商。HOMA的專業設計令其在製造潛水泵和潛水馬達科技方面領先對手。HOMA潛水泵主要使用在民用，工業廢水和排污處理設施。

HOMA在設計上採用最新的3D電腦輔助設計系統，加強了產品開發的質量和可靠性。HOMA在設計上特別著重於零件的替換能力，來保證使用者在營運上的成本效率。HOMA的技術使其在世界潛水泵製造上處於領導地位。

History of HOMA PUMP

1946 Founded as electric motor manufacturing and repair company

1962 Start of production of submersible drainage pumps

1965 First production of submersible sewage pumps

1979 Start of production of submersible grinder pumps

1994 ISO 9001 certification

1999 Construction of new factory building

HOMA Submersible pumps

HOMA 潛式水泵

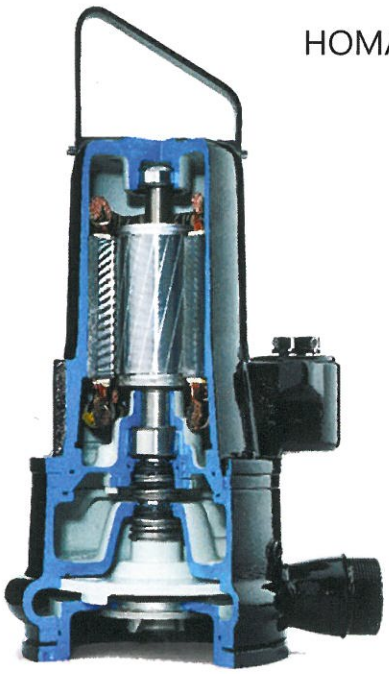

產品設計
Product Design

HOMA 在生產時採用3D 系統輔助設計，令研發能力能夠提升之外，亦能增強產品的穩定性與效能。

All of HOMA innovative designs are created by 3D CAD System.

產品測試
Product Testing

HOMA 為旗下產品進行嚴格的測試。
Products are throughly tested aganist international standards .

水泵的水力測試台
Various sizes of test facilities

高標準·高質量

HOMA在生產過程中，一直以最高的標準和準確的生產為製造的宗旨。
在德國的Neunkirchen-Seelscheid, HOMA擁有一個大型的生產基地，
以專業的部門製作泵件，控制元件和驅動馬達系統。
HOMA亦有一個完善的決策、溝通架構。
HOMA在生產上採用嚴格的質量管理，確保生產效率和質量的提升。
完善的客戶服務使顧客能在最短時間內得到完善的解決方案。

High Standard · High Quality

HOMA keeps a high standard on their manufacturing processes. The manufacturing base is located at Neunkirchen-Seelscheid in Germeny. Professional departments are employed to manufacture specialist parts in house which gurantees HOMA's product quality.

潛式電機設計

優勢電機的設計，為S1運行方式(持續運行方式)。HOMA的電機還採用了最大的換檔頻率，以每小時15次換檔。潛水電機除可選擇標準式設計外，在浮水式或乾式安裝上，還可選擇水冷或油冷電機散熱設計。

Submersible Motor Design

The motors are designed for continuous operating duty (S1) at maximum 15 starts per hour. In addition to a fully submerged motor housing in wet well installation, a jacket cooled motor-variant is available for S1 operating with a non-fully submerged motor or for dry well installation.

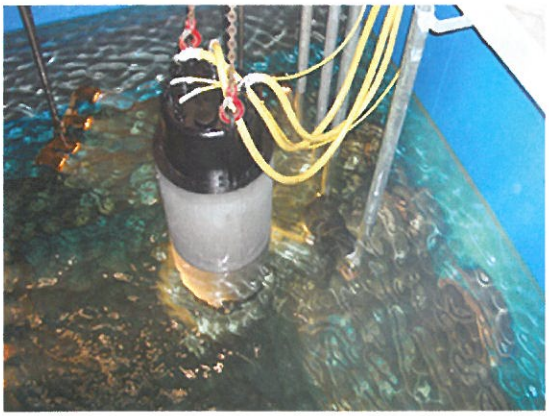

Installation for Pump Station

Wet well installation with auto-coupling system
Submerged auto-coupling guide tube system for automatic connection and disconnection of the pump from the pipework from the sump. All maintenance and repair work can be done outside the sump. Back in operating position, the weight of the pump ensures leak-proof discharge connection.

Wet well installation with base stand
Submerged pump mounted on a ring base stand for temporary service or emergency operation. Discharge connection with pipe or hose.

Permanent dry well installation vertical or horizontal
Flood-proof install for pump stations with separate collection sump. Fixed flanged connection of suction and discharge pipe.

泵站安裝方式

濕井安裝
泵掛於不銹鋼軌道壓力管上，與一個固定在井底的離腳座裝置連接。通過一組被固定安裝的雙路軌作引導，在維修時，可通過井口，沿路軌升起泵台。採用這個組裝，連接與脫接均是自動的，並無須在一般維修時進井工作。HOMA的接合系統是採用橡膠密封，以確保了泵與喉管之間無泄漏的接合。

手攜式濕井安裝
手攜式安裝適用於坑穴和緊急操作中。如安裝位置受限制或在緊急維修中，水泵可備合軟式壓力管操作。

乾井安裝(垂直或水平)
乾井安裝可保証廢水不溢出井外。乾井安裝能方便維修和適合分離式或混合井的泵站。

Products 產品

)escription	Submersible sewage pumps 潛式污水水泵	Waste water Submersibile drainage pumps 廢水及污水潛水水泵	Jacket cooled Submersible sewage pumps 備有冷卻外殼的潛式污水泵	Submersible grinder pump with cutter system 備有研磨器的切割系統潛水泵
ıpplication	Sewage and effluent disposal Sewage pumping station, effluent treatment plants. For sewage, effluents and sludge containing solids 用於污水處置,污水泵站,處理後的污水 適用於污水和包含固態淤泥的污水	Drainage of surface water or waste water, disposal of effluents containing suspended solids,up to 65 mm Ø, like fibres, textile, leaves etc. 用於污水及廢水處理,含固體的排水設備(固體直徑最大為65毫米,例如纖維,紡織品,殘留物等)	Sewage and effluent disposal Sewage pumping station, effluent treatment plants. For sewage, effluents and sludge containing solids (jacket motor cooling) 用於污水處置,污水泵站,處理後的污水 適用於污水和包含固態淤泥的污水 (備有冷卻外殼的潛水泵)	Sewage and effluent disposal from single houses, farms etc. Through $1^{1/2}$"-2" pipes against high pressure 用於單一的房屋的污水和處理後的廢水的排放等 適用於$1^{1/2}$吋及2吋的管件
ischarge size	R 3"/DN 80 - DN 500	R $1^{1/2"}$ - R $2^{1/2"}$	R 3"/DN 80 - DN 500	R 2" / DN 50
Motor utput (P_2)	0,9 - 300 kW	0,6 - 3,4 kW	0,9 - 300 kW	0,9 - 11,0 kW
lead (H_{max})	3,5 - 60 M	7 - 30 M	3,5 - 60 M	20 - 69 M
Quantity audal (Q_{max})	32 - 4500 M^3/h	18 - 81 M^3/h	32 - 4500 M^3/h	14,4 - 31,0 M^3/h

EATURES

Explosion proof 防爆功能	Explosion proof 防爆功能	Explosion proof 防爆功能	Explosion proof 防爆功能
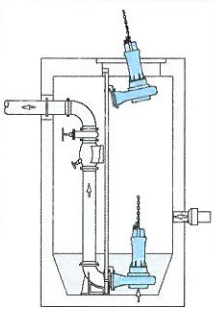	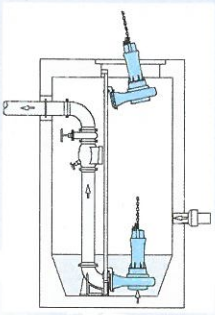	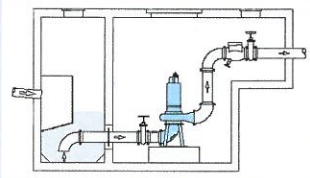	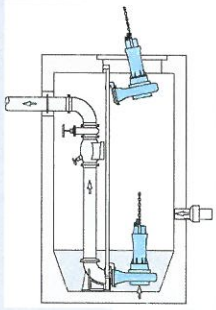
Wet well installation with auto-coupling system 濕井安裝	Wet well installation with auto-coupling system 濕井安裝	Permanent dry well installation vertical or horizontal 乾井安裝	Wet well installation with auto-coupling system 濕井安裝

Jacket cooled,wear resistant submersible pumps 冷卻外殼,防損耗的潛水污水水泵	Domestic waste water disposal units 家庭用的廢水處理單位	Compact sewage disposal units with grinder pump 緊閉式有研磨器的污水處理單位	Compact packaged sewage pump stations 緊閉式的污水單位
Drainage or water supply. Contractors' drainage pumping at low water level. For water containing suspended sand, mud and gravel 用於去水和工地污水,備有冷卻外殼的潛水泵,用作去水道,污水道以下之環境下泵水適用於含有沙,泥及石子的污水	Waste water disposal from rooms below sewer level. Complete units with tank and submersible pump. Discharge from sink, washing machine shower, bath or floor drain. 適用於去水道,污水道以下排放廢水, 完整的處理單位包括儲水箱及潛水水泵適用於洗滌槽,洗衣機,花灑系統, 浴室及單位下水道	Sewage and waste water disposal from sanitary installations below sewer level. Complete units with tank and submersible grinder pump. 適用於去水道,污水道以下排放污水和廢水, 完整的處理單位包括儲水箱及有研磨的潛水水泵	Sewage and waste water disposal from sanitary installations below sewer level. With tanks up to 1000L volume and 1 or 2 submersible pumps. 適用於去水道,污水道下排放污水和廢水包括一至兩台潛水水泵及一千升以下的儲水箱
R $1^{1/2"}$ - R 6"	R $1^{1/4"}$ - R$1^{1/2"}$	R $1^{1/4"}$ - R 2"	DN 80 - DN 100
1,0 - 20,4 kW	0,13 - 0,86 kW	0,6 - 2,1 kW	0,9 - 11,6 kW
11 - 72 M	5,5 - 14 M	7 - 33 M	6 - 32 M
15,6 - 342 M^3/h	7 - 26 M^3/h	15 - 22 M^3/h	33 - 200 M^3/h
Explosion proof 防爆功能		Explosion proof 防爆功能	
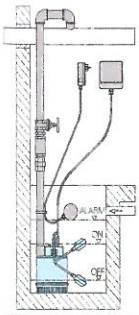 備有浮波系統 Provide with floats Wet well installation with base stand 手攜式濕井安裝	備有研磨器 Provide with blades 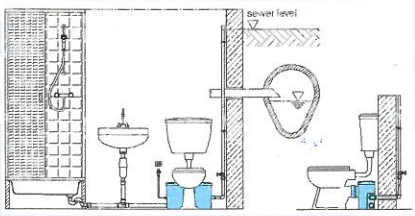 Installation Sample 安裝位置	備有控制箱 Provide with Control box 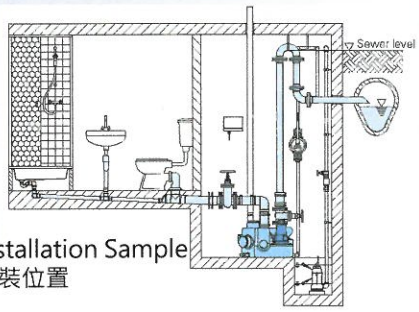 Installation Sample 安裝位置	備有控制箱 Provide with Control Box