AN INTRODUCTION TO FLAP VALVES

INTRODUCTION

Good flap valves work in the background without being noticed. Only at times of high water or flooding do people realise the importance of such non-return valves. On these critical occasions you must be able to rely on the flap valves you have installed.

Basically, flap valves allow for the removal of excess water and prevent back flow.

This function has to be performed over long periods. At the same time the valves must not be sensitive to rust, corrosion or clogging.

TRADITIONAL DESIGN

Traditional metal flap valves suffer from a number of problems.

They are made of cast iron, which is heavy. This results in high head losses and all manner of rubbish can accumulate behind the door before it opens to discharge the water build-up. This can result in complete blockage of the valve. Thus regular checking, maintenance and cleaning is essential.

Methods of reducing the high opening pressures required for metal valves are hollow doors filled with oil or counter weights added above the valve. This in turn makes the valve more complex to mount and takes up more space in the construction.

Corrosion is also a big problem, especially when the valves are exposed to seawater. Coatings are required to provide protection.

HDPE

Our HDPE flap valves provide the customer with much improved characteristics:

- no corrosion
- good chemical resistance against acids, salts and alkalis in aqueous solutions, many solvents, oils, etc
- high UV protection by addition of carbon to the material to stabilise for outside use
- use between -50°C and +70°C (constructive values)
- low density and lightweight
- a material as easy to machine as wood
- dimensional stability
- no rotting
- no material fatigue
- impact resistance
- high flexibility
- economic design and material

These characteristics result in the following customer benefits:

- long service life because the material does not corrode
- no coatings needed in aggressive environments
- very low opening pressures compared to metal flap valves
- low head losses

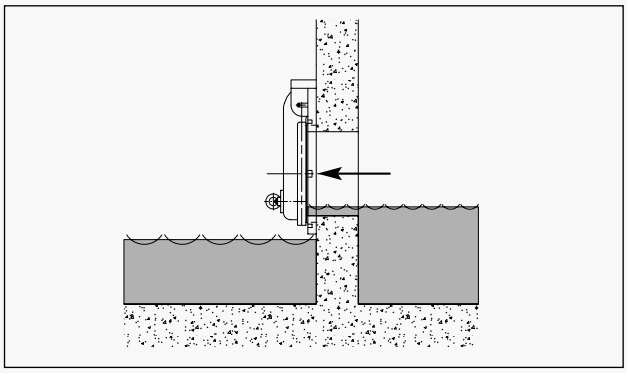

Flap valve above the water line

Our HDPE flap valves have opening pressures that are measured in mm instead of centimetres as normal.

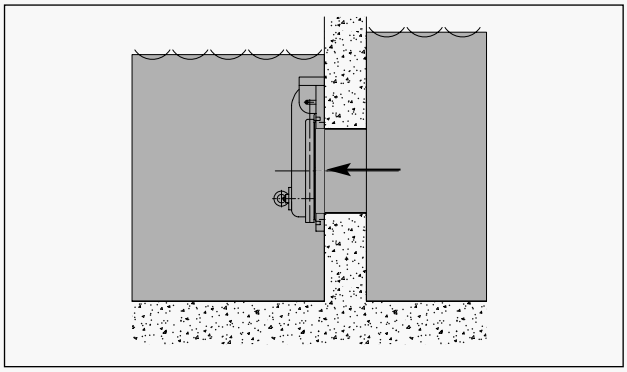

Flap valve in submerged situation

HDPE has a lower density than water and floats. The specific weight is increased to approx. 1100 kg per m3 by the addition of ballast. This ensures that the flap valve will do its job under any circumstances, and at the same time ensures much lower head losses compared to traditional flap valves.

Modifications reserved.

AN INTRODUCTION TO FLAP VALVES

When the valve is completely submerged, the differential opening pressure is not more than 10 mm water column!
- minimal maintenance.
  As the material remains smooth, it is much more difficult for dirt to stick to the surface.
- lightweight construction - easy to install and handle.
- HDPE is a solid material. Possible damage to the outside will not result in corrosion inside.
- flexibility in design. The unique CAD/CAM production system enables TBS SOEST bv to make special designs and provide tailor made solutions with short project lead times. Products can be adapted to a specific (opening) pressure or installation situation.

  More than 50 % of the products made are special tailor made designs.

TBS flap valves are made for both gravitational flow / free flow (PTK) and pumping stations (PWK) and from 150 mm up to 2000 mm diameter and even larger.

Selection considerations

We provide a checklist that takes numerous factors into account to help establish what exactly is required. There are different flap valves for various applications:
- permanently submerged or flood prevention / emergency
- gravitational flow or pressure pipes
- different mounting situations, such as wall mounting, flange, PVC and concrete tubes

We can provide the best solution for every situation.

To determine which product is suitable for which situation the following have to be taken into consideration:

1) dimensions of the opening
2) application
3) type of flow: gravity or pressure pipe?
4) maximum water pressure on the front in metres water column? Is it permanent or temporary?
5) what is the installation situation?

Application

If the flap valve will only be used in emergency situations to protect against and prevent flooding during a specific period of extreme conditions, flap valve type PTK-G is advised.

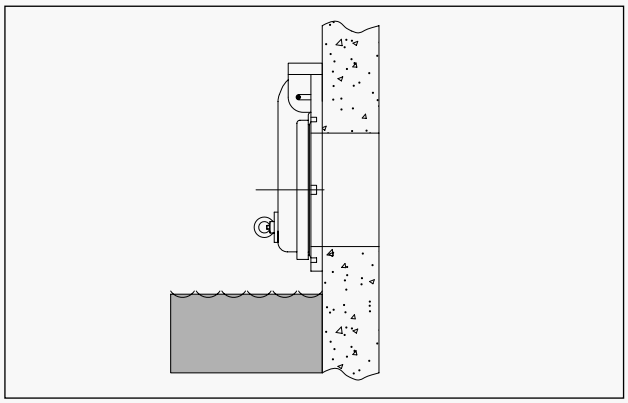

Use of PTK-G above water level

The model PTK-G is normally installed above the water line. It prevents back flow only in times of sudden increases in water levels due to heavy rain and flooding.

Its compact dimensions also enable this flap valve to be installed in small concrete chambers where other, more traditional designs do not fit.

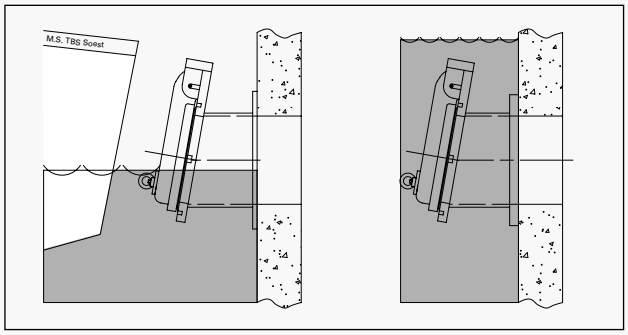

Application of PTK-A

When the flap valve will be exposed to waves / tidal movement or will be permanently submerged, a flap valve with an inclination of 10 degrees is advised: PTK-A or PWK-F.

This inclination will ensure watertight operation. The door is always pushed onto the seating.

Modifications reserved.

AN INTRODUCTION TO FLAP VALVES

Gravitation versus pressure pipe situations

The flow situation is also important for determining the type of flap valve needed.

A flap valve of type PTK is used for free flow. Flow is achieved by gravity at low velocities.

When the flap valve is situated at the end of a pressure pipeline / pumping station, the flap valve type PTK cannot be used; you will require a flap valve type PWK.

Using a standard valve in this type of pumping situation will result in serious damage to the seal and hinges.

Air vent function

When the flap valve operates in combination with a pump, the function of the air vent is not obvious during operation.

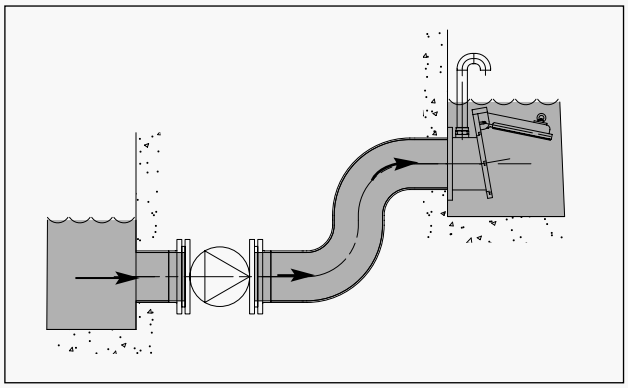

Pump in operation

It only becomes clear when the pump stops: then the air vent operates.

As the pump stops, the flow reverses and the flap valve must prevent this. In the very short time span between the pump stopping and the flap valve closing, the flow returning into the pipe can result in very high pressures. This is the result of a vacuum inside the pipe.

The vacuum will result in serious damage to the seal, hinge points and seating.

The aerator prevents vacuum formation by allowing air to enter via the air vent and thus preventing damage to the flap valve.

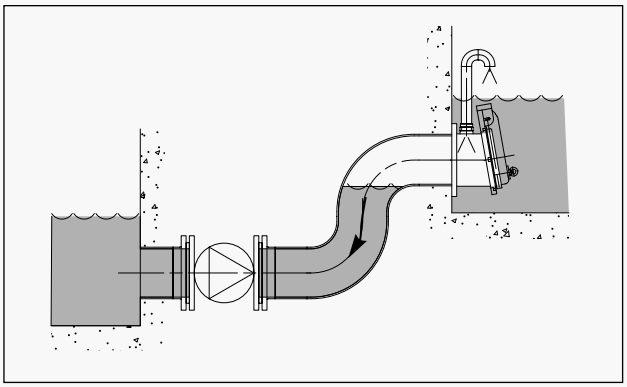

Pump stops

In this way the valve closes slowly and in a controlled manner.

When the pump starts up it compresses the air remaining in the pipe. The compressed air can leave the pipe through the air vent.

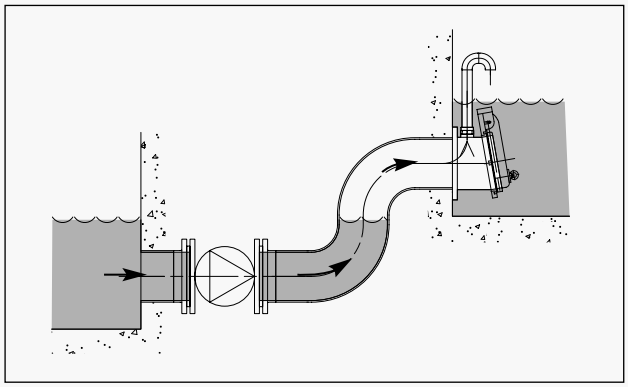

Pump starts to operate

The size of the aerator is approx. 10% to 15% of the flap valve passage.

Small flap valves up to and including 400 mm diameter are equipped with a threaded opening measured in inches. With bigger diameters the air vent will be equipped with a flange.

The customer must extend the aerator until it is above maximum water level.

Maximum pressure

The standard flap valves are designed to resist a permanent water pressure of 1 metre water column from the top of the opening and 5 metres water column from the bottom of the opening for only a short duration (up to 72 hours).

Modifications reserved.

AN INTRODUCTION TO FLAP VALVES

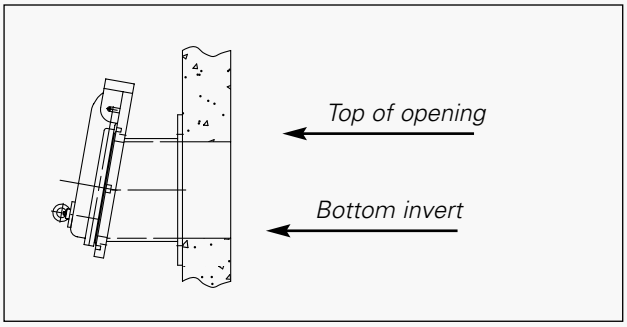

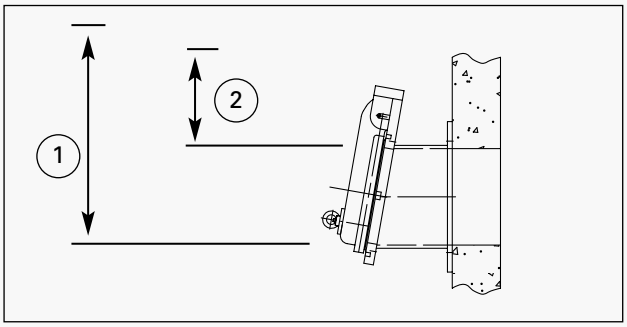

The same pressure ratings apply to all TBS flap valves:

1. 5 metres water column from bottom of invert for short duration (up to 72 hours)
2. 1 metre water column from top of opening permanently.

If the pressure differs from the above situations - especially if it is higher -, it is always advisable to inform TBS. Then the flap valve can be adapted to the required pressure.

Installation situation

Wall mounting

As most outlets are designed in concrete structures, the most common method of installation is "wall mounting". The flap valve type PTK–A (with angle of 10 degrees) or PTK-G (vertical) can be installed.

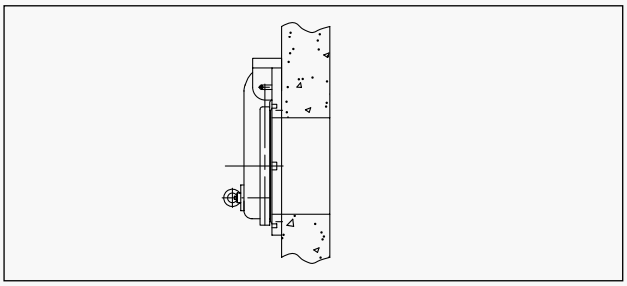

PTK-G wall mounting

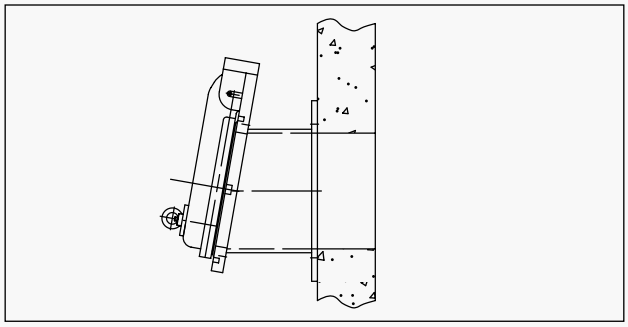

PTK-A wall mounting

A neoprene gasket is included in the delivery to ensure a watertight connection between the wall and the frame plate.

Flange

The flap valve can also be mounted on a counter flange. Our standard flange is in accordance with DIN EN 1092-2 standard PN10. Other flanges (BS, ASTM, DIN PN 16) can be supplied on request.

The connection F for flange will always be used for the PWK flap valve that requires a connection resistant to tensile stresses.

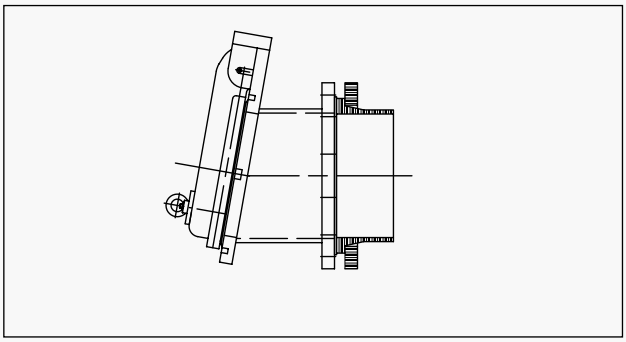

PTK-F with flange

Special flange packing and bolts are not supplied as standard.

PVC tube

The P model can be connected to a PVC / HDPE tube with a socket. As you can see in the table on page 21, the outside diameter of the connection is equal to the outside diameter of the PVC tube. So the flap valve with P connection can be easily mounted to a PVC tube with a socket.

Modifications reserved.

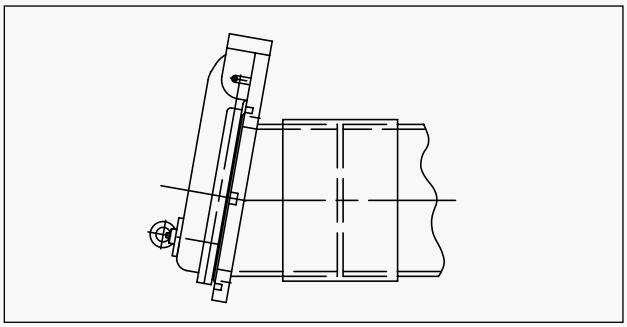

PTK-P for PVC tube

Other diameters/dimensions that are not mentioned in the table are available on request.

CONCRETE / STEEL TUBE

To connect the same flap valve to a concrete or steel tube, a socket is welded to the flap valve and this is inserted into the pipe.

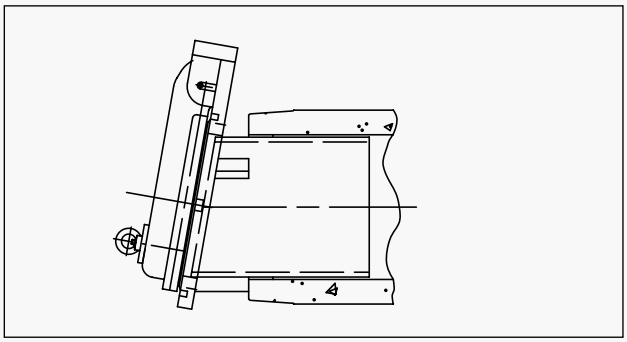

PTK-BS for concrete tube

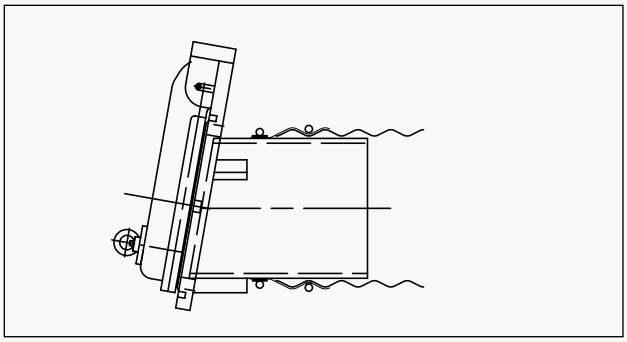

PTK-BS for steel tube

The flap valve is fixed in place using bolts.

A neoprene gasket is included in the delivery to ensure a watertight connection between the socket and the tube. The neoprene gasket is wrapped around the socket and pushed into the tube.

This compresses the gasket and achieves a watertight connection.

Checking out all the above details will help you to ensure that you receive the correct product.

Modifications reserved.

TBS FLAP VALVES AROUND THE WORLD

Manjung Powerplant Ipoh Malaysia

Series of flap valves in Holland

YL 50 project Hong Kong

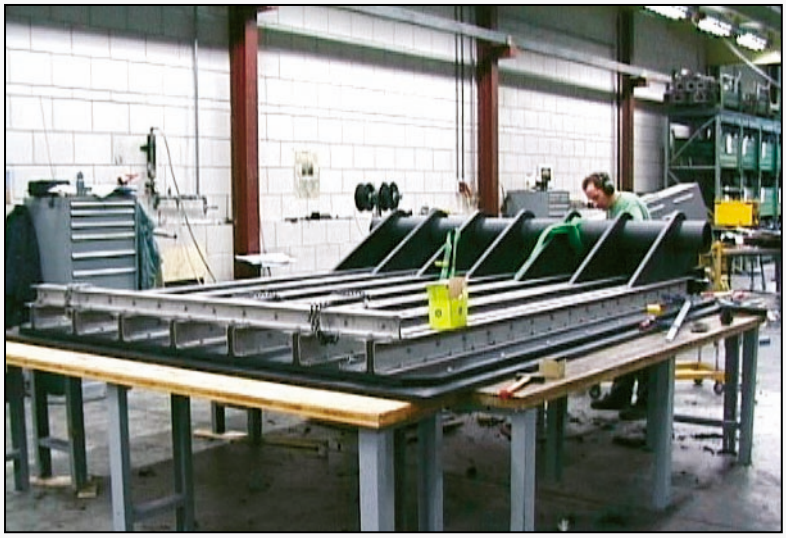

Production of flap valves for Tong Young Project Korea

Production of flap valves for Paju Pumping Station in Korea

PTK A with rounded frame plate in round concrete chamber in Sweden

DID project Malaysia

Modifications reserved.