VAG Air Valves

VAG DUOJET® Automatic Air Valve

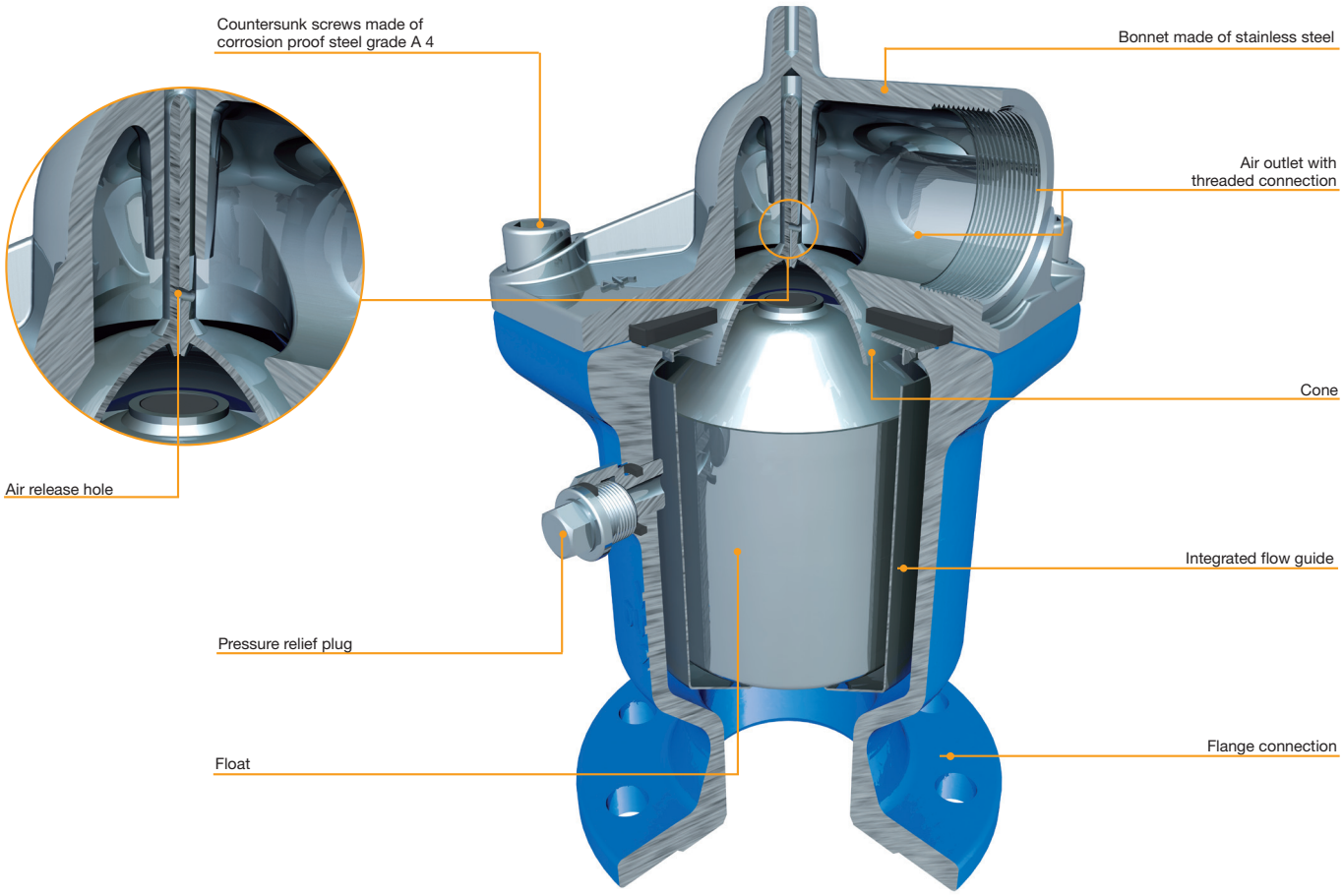

Technical details

- Nominal pressure PN 10 / PN 16 / PN 25 / PN 40
- Nominal diameter DN 50...DN 200
- Fields of application: Installation in pits, installation on pipelines, installation in plants, suitable for drinking water up to 50° C
- Standard model: Bonnet made of stainless steel grade 1.4308, body made of ductile iron EN-JS 1030 (DCI-40), inner parts and float made of stainless steel grade 1.4541 (exception: float of DN 50, PN 10 / PN 16 made of plastic), with flange connection to EN 1092-2
- Epoxy coating according to GSK quality specifications
- Special versions
  - AWWA type
  - For pressures from 0.1 to 1 bar special seal (with special seal)
  - For flange dimensions to ANSI class 150
  - With insect screen
  - Connection of DN 50 / PN 16 with G 2” thread upon request
  - VAG DUOJET®-S with integrated shut-off valve VAG CEREX® 300-L Butterfly valve with hand lever
  - VAG DUOJET® Anti-Surge with integrated shut-off valve VAG CEREX® 300-L Butterfly Valve with hand lever

Product features

- Single chamber type in compact design ensuring easy assembly and low space requirements; highly reliable function and low maintenance.
- Economic solution due to a venting system with three functions:
  - Venting
  - Air release
  - Automatic air release during operation.
- Guaranteed air discharge even at high air velocities, no interruption of the filling process and high discharge capacity due to the integrated flow guide.
- All parts in touch with the medium are made to KTW and DVGW W 270 requirements, avoids bacterial contamination.
- Maintenance possible without shutdown of the pipeline due to pressure relief plug with cross bore.
- Due to optional features such as insect screen or orifice, the valve can be adapted to operating and environmental conditions at a later point of time.
- All metal are made of corrosion proof materials and thus corrosion-resistant and incrustation-free.
- Threaded air outlet for the field connection of drainage pipes.

VAG TWINJET® Automatic Air Valve

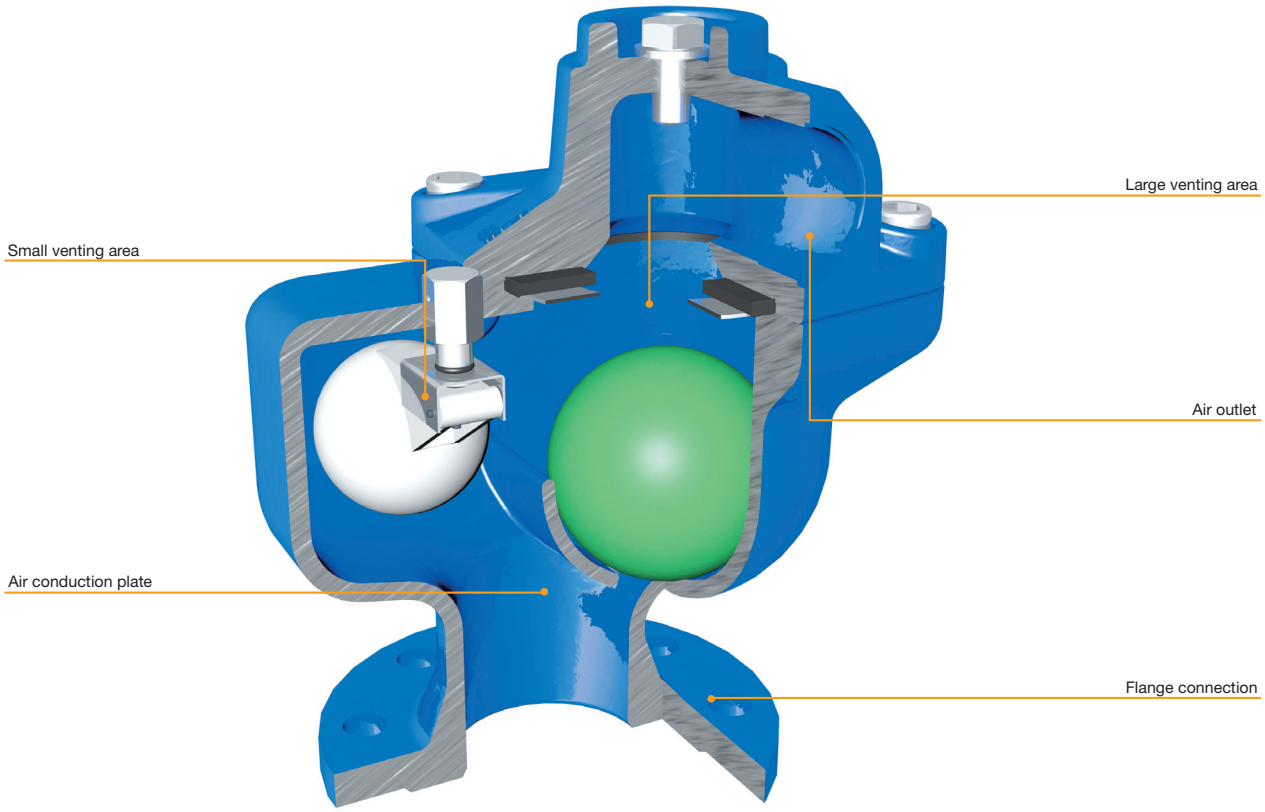

Technical details

- Nominal pressure PN 10 / PN 16 / PN 25
- Nominal diameter DN 50...DN 300
- Fields of application: Installation in pits, installation on pipelines, installation in plants, suitable for drinking water up to 50° C
- Standard model: Bonnet and body made of ductile iron EN-JS 1030 (DCI-40), inner parts and float made of plastic (exception: float of DN 250 and DN 300 made of stainless steel grade 1.4571), outlet with parallel female thread to DIN ISO 228
- Minimum pressure required for sealing: 0.3 bar
- Epoxy coating to GSK quality specifications
- Special versions: VAG TWINJET®-S with integrated shut-off valve VAG CEREX® 300-L Butterfly valve with hand lever

Product features

- Double-chamber valve with compact design ensuring easy assembly, low space requirements, highly reliable function and low maintenance.
- Economic solution due to a venting system with three functions:
  - Venting
  - Air release
  - Automatic air release during operation.
- High discharge capacity for large amounts of air possible by special design with air diverter plate.
- Version VAG TWINJET®-S with integrated butterfly valve allows dismantling the valve from the pipeline without interruption of operation.
- Easy maintenance due to lateral pressure relief plug.
- With lifting eye for easy installation of the valve.

VAG BEV-E Automatic Air Valve

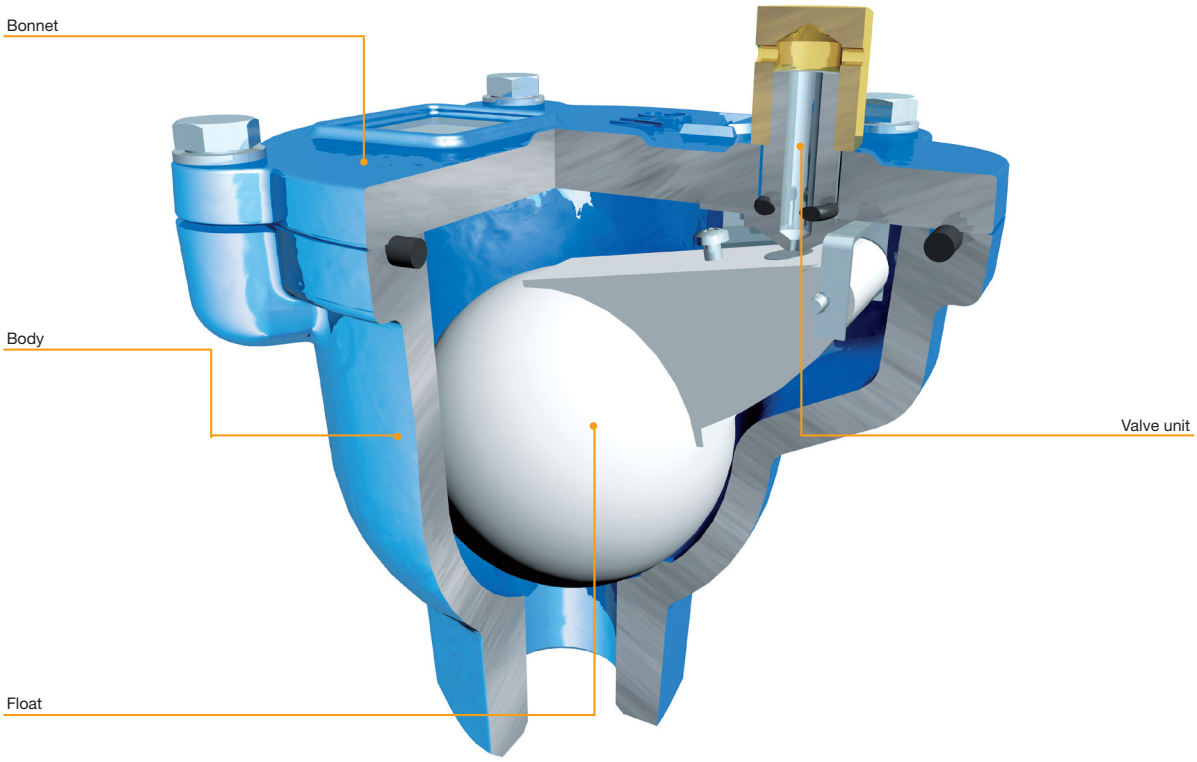

Technical details

- Nominal pressure PN 16 / PN 25
- Fields of application: Installation in pits, installation in plants, for domestic water supply pipelines
- Standard model: Bonnet and body made of ductile iron EN-JS 1030 (DCI-40), float made of plastic, with thread for easy direct connection to the pipeline; single-chamber valve in compact design; outlet with parallel female thread to DIN ISO 228 G ¾ “, G 1”, G 1 ¼ “
- Inside and outside epoxy coated
- Special versions: with ball valve for isolation

Product features

- Air valve with double function
  - Small venting cross-section to release small amounts of air during operation
  - Medium air release capacity for small amounts of air.
- Compact design ensuring easy assembly, low space requirements, highly reliable function and low maintenance.

VAG BEV Venting Set

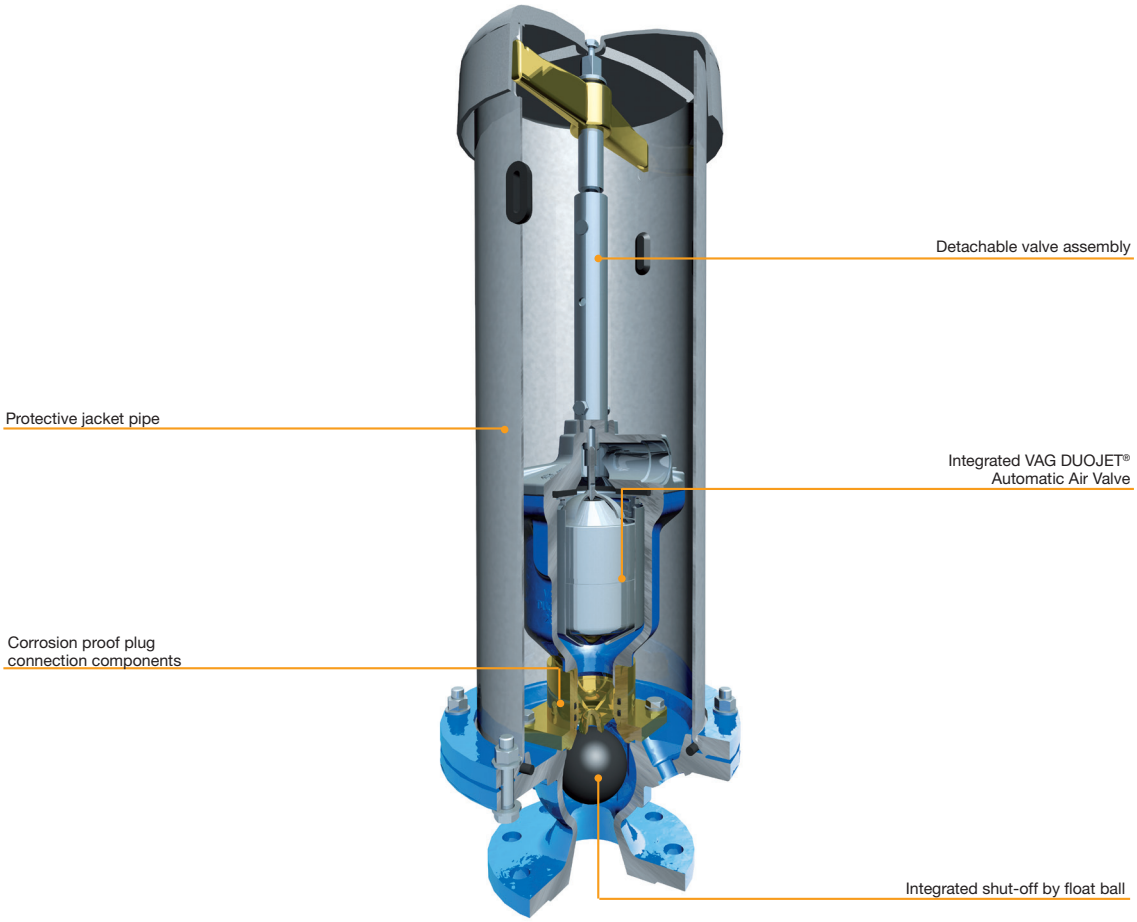

Technical details

- Nominal pressure PN 16
- Nominal diameter DN 80
- Fields of application: buried installation, suitable for drinking water up to 50° C
- Standard type: Body of the VAG DUOJET® Automatic Air Valve made of ductile iron EN-JS 1030 (DCI-40), protective jacket pipe made of stainless steel grade 1.4541; bonnet of protective jacket pipe made of corrosion-resistant aluminum alloy, float made of plastic, with flange connection to EN 1092-2
- Minimum pressure required for sealing the venting areas: 0.3 bar
- With VAG DUOJET® Automatic Air Valve DN 50 / PN 16 and DN 80 / PN 16
- Ductile iron parts epoxy coated on inside and outside
- Special versions:
  - Special seal for pressures from 0.1 to 1 bar
  - With spigot-end connection for the VAG BAIO®plus system

Product features

- Economic solution due to a venting system with three functions:
  - Venting
  - Air release (high discharge capacity)
  - Automatic air release during operation.
- The protective jacket pipe takes over the function of the pit, which eliminates the necessity of investments on site.
- The sturdy, rust-proof unit allows direct buried installation (above-ground or underground installation in a special surface box), which considerably reduces installation costs.
- Version with spigot-end connection:
  - Corrosion resistant due to boltless connection
  - Pull-out proof due to positive and friction-locked connection
  - Short assembly times due to easy assembly or disassembly
  - Stress-free laying due to flexibility of inclination up to +/- 3°.
- Jacket pipe can be shortened by 100 mm on site, which ensures flexible adaptation to the installation height.
- Automatic shut-off towards the pipeline via rubber coated ball. This ensures the reliable and automatic shut-off when the valve is dismantled.
- The screwed fitting serving as drain port allows the discharge of splashed water directly into a suitable drainage pit or via a drain hose.

VAG Spring-Loaded Air Valve

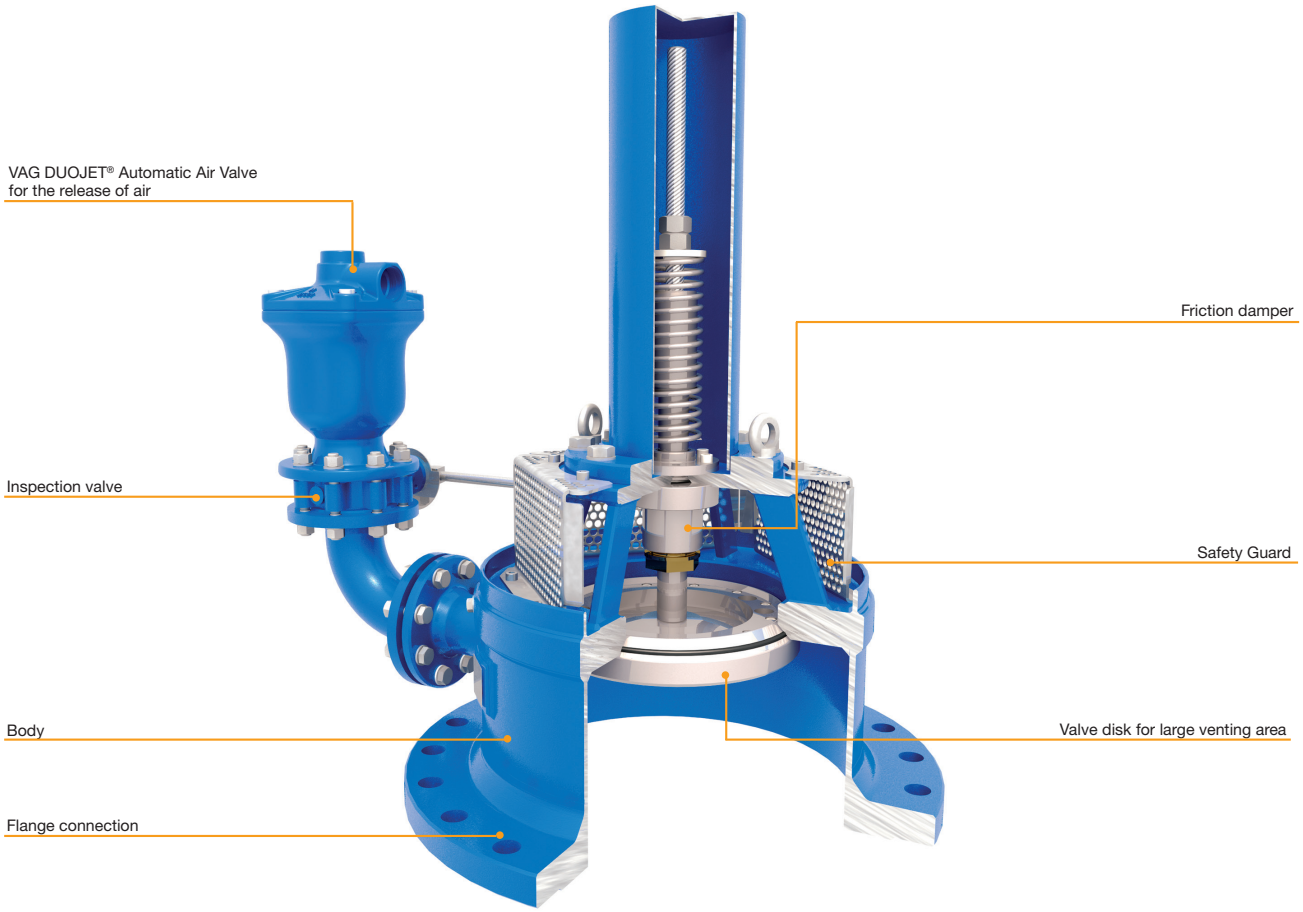

Technical details

- Nominal pressure PN 10 / PN 16 / PN 25
- Nominal diameter DN 300...DN 800
- Fields of application: bottom outlets of dams, long-distance pipelines or downstream of large butterfly valves
- Standard model: bonnet and body made of welded steel S235JRG2, inner parts and stem made of stainless steel grade 1.4301, body of the VAG DUOJET® Automatic Air Valve and the inspection valve made of ductile iron EN-JA 1030 (DCI-40), with flange connection to EN 1092-2
- Minimum pressure required to seal the venting areas: 0.3 bar
- With VAG DUOJET® Automatic Air Valve arranged on the side and upstream inspection valve (VAG CEREX® 300 Butterfly Valve)
- Inside and outside epoxy coated
- Special versions: larger nominal diameters available upon request

Product features

- Air valve with triple function:
  - Large disk cross-section to vent large amounts of air in case of quick shut-down, quick drainage or pipe bursts
  - Medium-sized cross-section to release air while the pipe-line is being filled (VAG DUOJET®)
  - Small cross-section to release small amounts of air during operation (VAG DUOJET®).
- Very high venting capacity for large amounts of air with attached VAG DUOJET® Automatic Air Valve for air release during operation.
- Friction damper to dampen the closing movement and thus reduce pressure surges.
- Safety Guard for the protection of people.

VAG FLOWJET® Automatic Air Valve

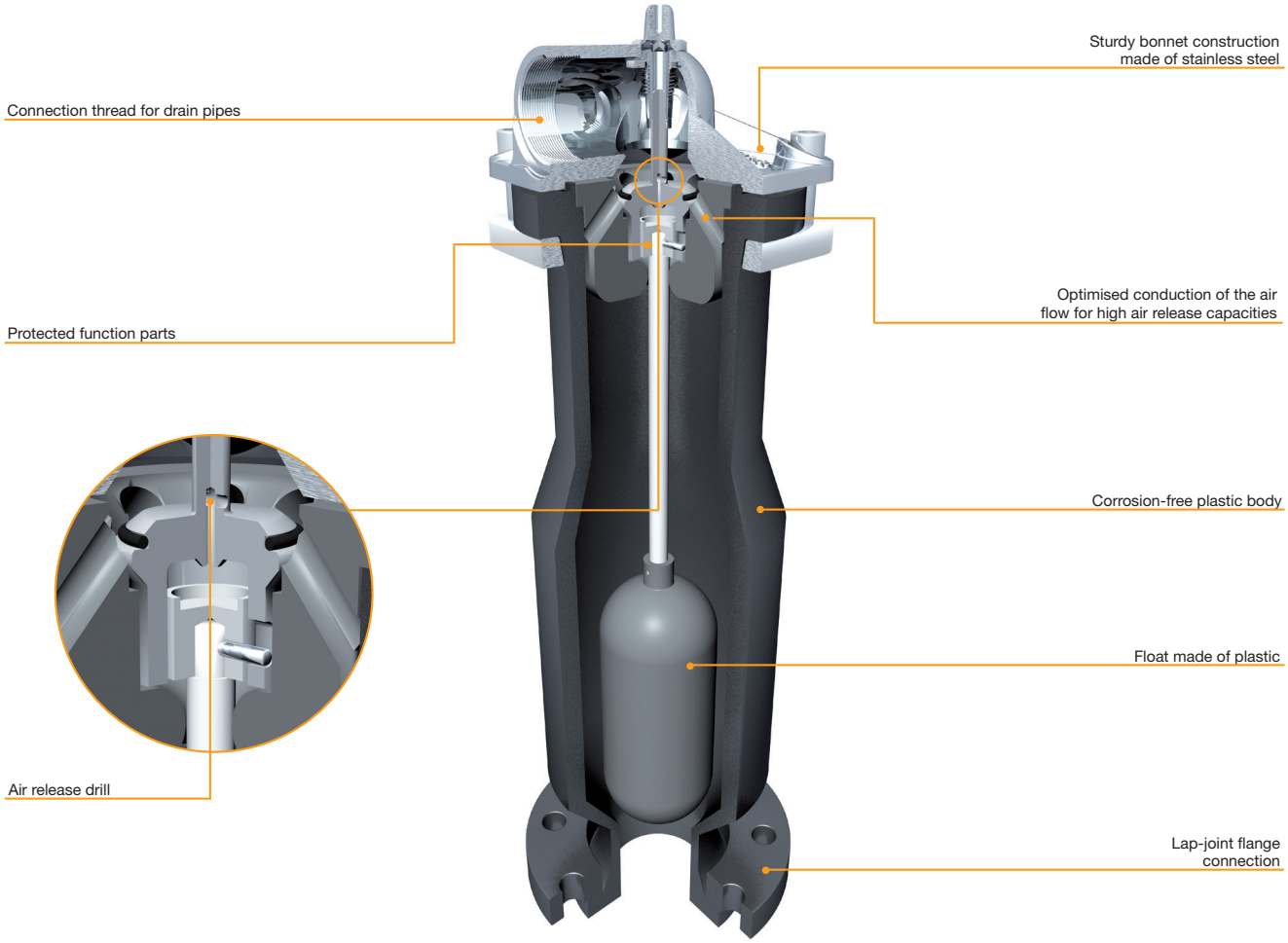

Technical details

- Nominal pressure PN 10 / PN 16
- Nominal diameter DN 50...DN 200
- Fields of application: pit installation, installation in plants, installation on pipelines
- Standard model: bonnet made of stainless steel grade 1.4308, body made of polyethylene 100, float made of polyethylene 100, lap-joint flange made of steel with PP coat; with flange connection to EN 1092-2, single-chamber valve in compact design, outlet with parallel female thread to DIN ISO 228 G 1 ¼", G 2 ½"
- Special versions
  - For flange dimensions to ANSI
  - Higher temperatures possible at reduced pressure
  - With venting block
  - With air release lock for purging with compressed air

Product features

- Economic solution ensured by a venting system with three functions
  - Venting
  - Air release
  - Automatic air release during operation.
- Easy cleaning of the inside ensured by incrustation- and corrosion-free PE plastic body, which makes maintenance fast and easy.
- Easy handling thanks to low weight.
- Maintenance-friendly as all inner function parts can be removed together from above.
- Low overall height due to specially designed upper part.
- Optimised air-flow conduction in the upper part ensures high air-release capacities.
- The moving functional parts of the valve are located inside the upper part of the valve where they are protected from dirty water. This ensures high reliability of function.
- Variable installation position due to lap-joint flange connection.
- Frost-proof due to flexible plastic body.

Reference projects

Shuidonggou coal-fired power plant / China

40 VAG DUOJET®
Automatic Air Valves

FENESTRELLE HEP / Italy

1 VAG Spring-Loaded Air Valve

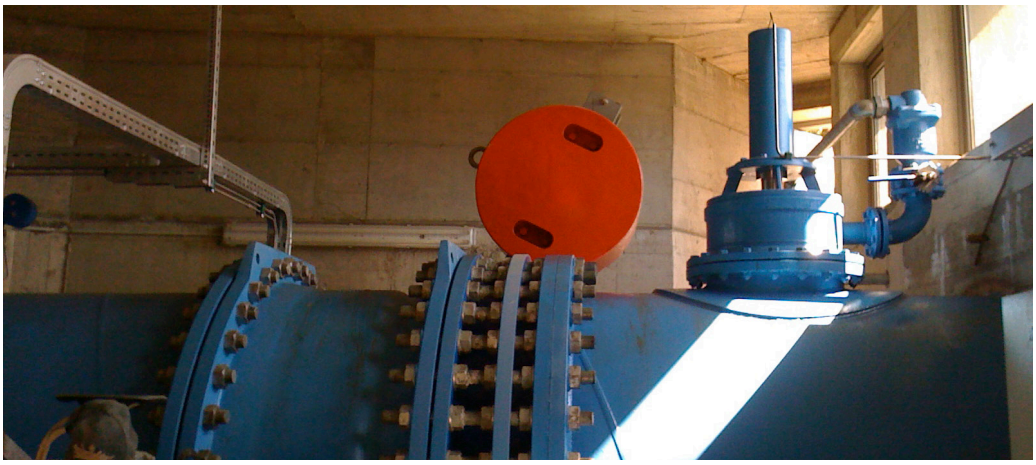

KARADUVAR waste water treatment plant / Italy

2 VAG FLOWJET®
Automatic Air Valves

Johannesburg Water
Parktown Reservoir / South Africa

1 VAG DUOJET®
Automatic Air Valve

VAG

www.vag-group.com
info@vag-group.com

For detailed information about nominal diameters, nominal pressures and types the technical documentation KAT-A is relevant. Pictures are non-binding

Edition 1_July-2012