VAG Control Valves

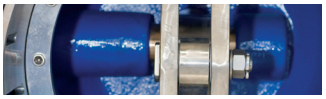

VAG RIKO® Plunger Valve

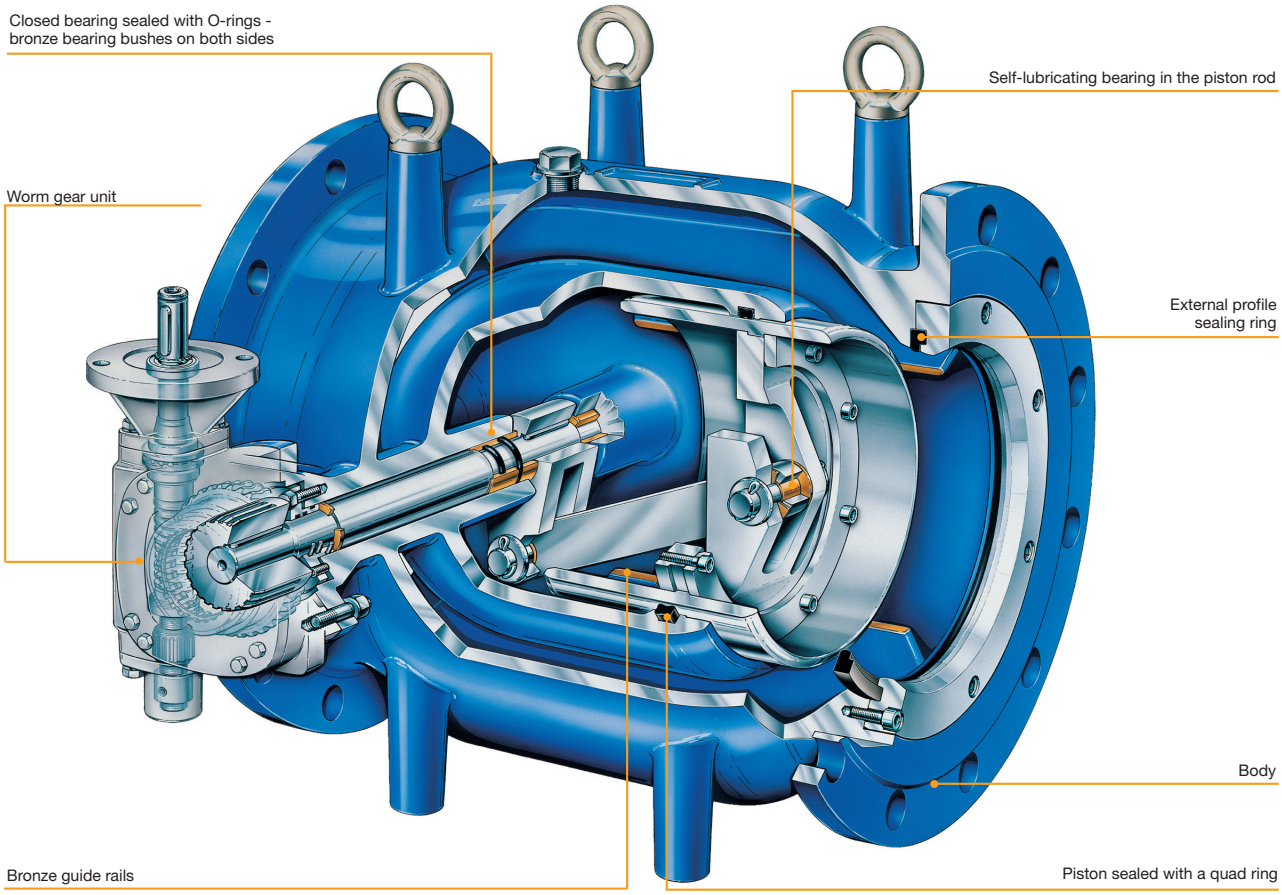

Technical details

- Nominal pressure: PN 10...PN 63 / class 150; class 300
- Nominal diameter: DN 150...DN 2000
- Fields of applications: Water, air regulation in waste-water treatment plants
- Standard model: Body made of EN-JS 1030 (GGG-40) ductile iron, piston made of 1.4301 stainless steel, with an adapted control device, worm gear unit and position indicator
- Actuator types
  - With a manual actuator
  - With an electrical actuator
  - With an hydraulic actuator
  - With a pneumatic actuator
- Epoxy coating according to GSK quality specifications
- Special versions
  - With a slotted cylinder to regulate high pressure differences in water with high solids („SZ“)
  - With a multiple orifice cylinder to regulate high pressure differences („LH“)
  - With a special cylinder, adapted to customer requirements
  - With a double cylinder for very high pressure differences
  - With a cut-off edge and a sudden enlargement of the cross-sectional area at the seat („E“)
- Cavitation-free operation provided by optimal design

Product features

- Valve seal in the no-flow zone for a long service life.
- Drive with a self-locking worm gear unit with a constant transmission ratio for a linear control curve in connection with an optimal control device.
- One piece, compact body across the full nominal width, thus reducing the number of components and eliminating potential leak path.
- Hard-faced bronze guides for low operating forces which also prevent the piston from jamming.
- Balanced piston for minimal operating forces.
- Multiple O-ring seals for primary and secondary piston sealing.
- The valve can be serviced and dismantled without removing it from the pipeline if the pipes are sized for easy accessibility.
- Inner parts made of stainless steel as a standard (DN 150... DN 600).
- Quad ring construction not sensitive to deposits on the piston.
- Valve highly efficient thanks to an optimised design and flow path.
- Connecting rod installed in maintenance-free, robust bronze / plastic compound bushes.

VAG PICO® Pilot Operated Control Valve

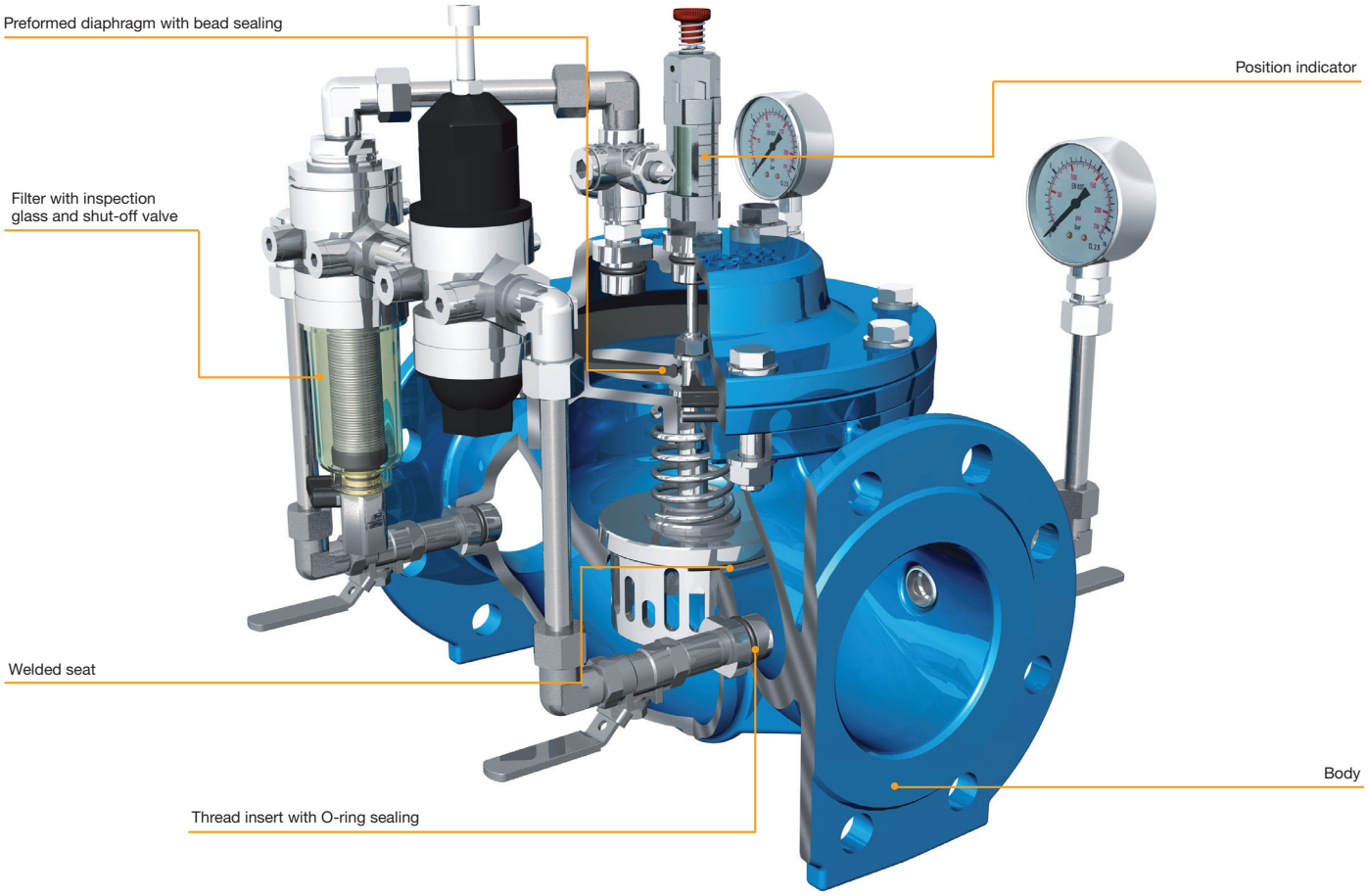

Technical details

- Nominal pressure: PN 10 / PN 16
- Nominal diameter: DN 50...DN 300
- Field of application: Water
- Standard model: Body and bonnet made of EN-JS 1030 (GGG-40) ductile iron, with an SZ40 slotted cylinder
- Self-acting valve, suitable for independent operation without an external supply of energy
- Inside and outside epoxy coating
- Special versions
  - As of DIN 300 on request
  - PN 25 on request
- Diaphragm and sealing made of EPDM according to DVGW W270

Product features

- Welded valve seat enhances resistance to wear, is anti-filtration and prevents the development of corrosion.
- Replaceable flow cartridges for better adaptation to operating conditions and for cavitation-free operation.
- CORFIX press-fitted thread inserts prevent exposed cast areas around connections and the development of corrosion.
- Integrated ventilation in the bonnet for the automatic release of trapped air and for preventing pressure fluctuations.
- Preformed membrane with bead sealing to prevent installation errors, secure sealing of the body Integrated stroke distance reduces wear and increases the useful life.
- Chambered, profile sealing ring on the valve seat, protected against extraction for guaranteed impermeability.
- Compact control block for setting opening and closing stroke speeds separately in order to adapt the response times to the operating situation.
- Fine-pored filter with inspection glass and shut-off valve for visualising the contamination level in the control circuit. Flushing also possible in operation while installed.

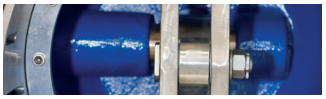

VAG KSS Hollow-Jet Discharge Valve

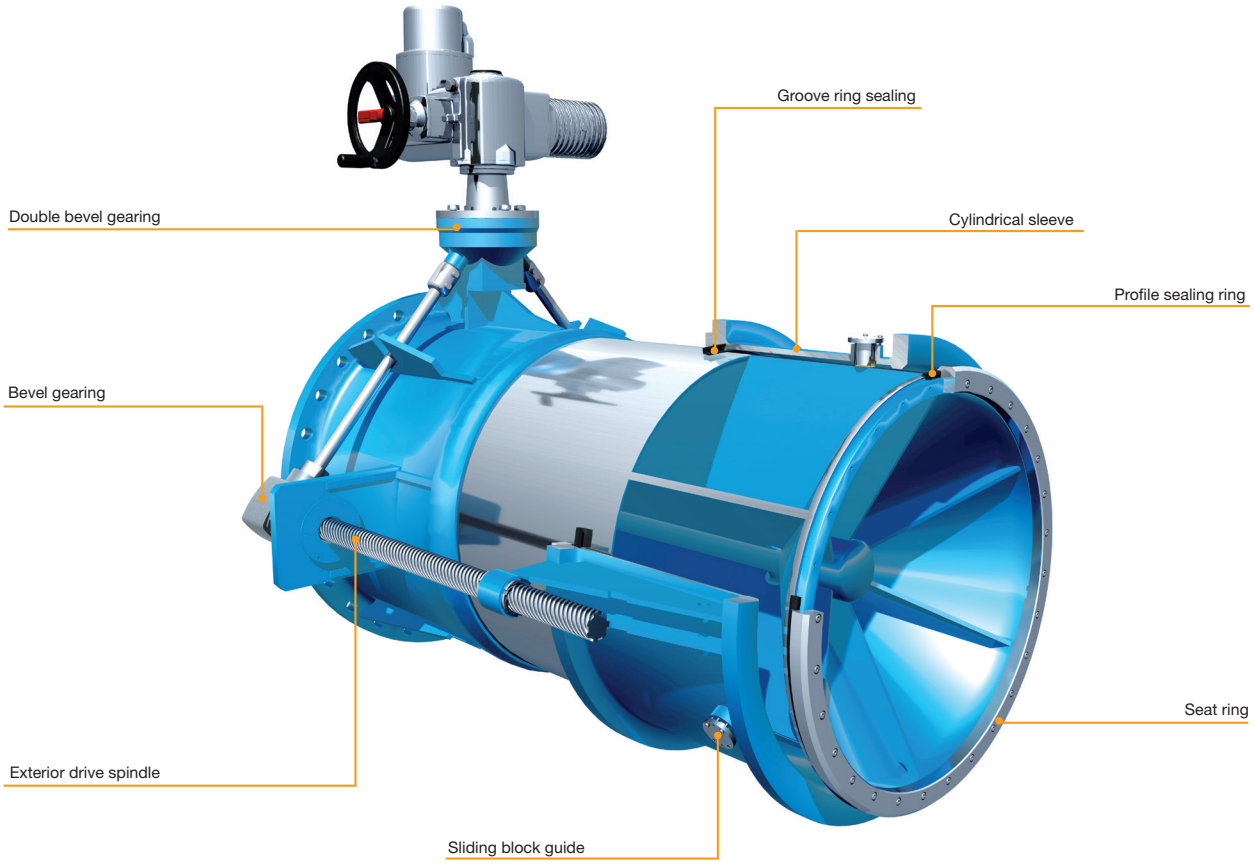

Technical details

- Nominal pressure PN 6...PN 25
- Nominal diameter: DN 400...DN 2000
- Field of application: Water
- Standard model: Jacket pipe and seat ring made of 1.4541 stainless steel, sealing surface and guides made of hard-faced 1.4502 stainless steel, jet guiding cone as a welded construction, S235JRG2, working surfaces of microfinished 1.4541 stainless steel or hard-faced 1.4115 stainless steel
- Inside and outside epoxy coating
- Actuator types
  - With a manual actuator
  - With an electrical actuator
  - With an hydraulic actuator
- Special versions
  - With a pipe hood
  - With a venting system
  - Coating as specified by customer

Product features

- Very high discharge capacity.
- Linear control characteristics.
- Intensive energy dissipation through cone-like dispersal of the jet stream.
- Cavitation-free discharge in all control positions.
- No risk to civil construction through vibration since the flow is only disrupted at the front; no partial separations in the discharge valve.
- Low driving forces (largely decompressed).
- No clamping power to impede movement and unhindered opening movement through long guide and exterior drive spindles.
- Robust sealing, primary sealing metallic, secondary sealing flexible.
- Easy to maintain due to:
  - Sealing can be replaced without dismantling the valve.
  - Exterior drive parts are easy to maintain and replace.
- Complete flush-out of all dirt and deposits.
- Starting from DN 1000 an additional sliding part can be adjusted by bronze sliding elements to secure a reliable and smothe operation.

VAG SAV Float Outlet Valve

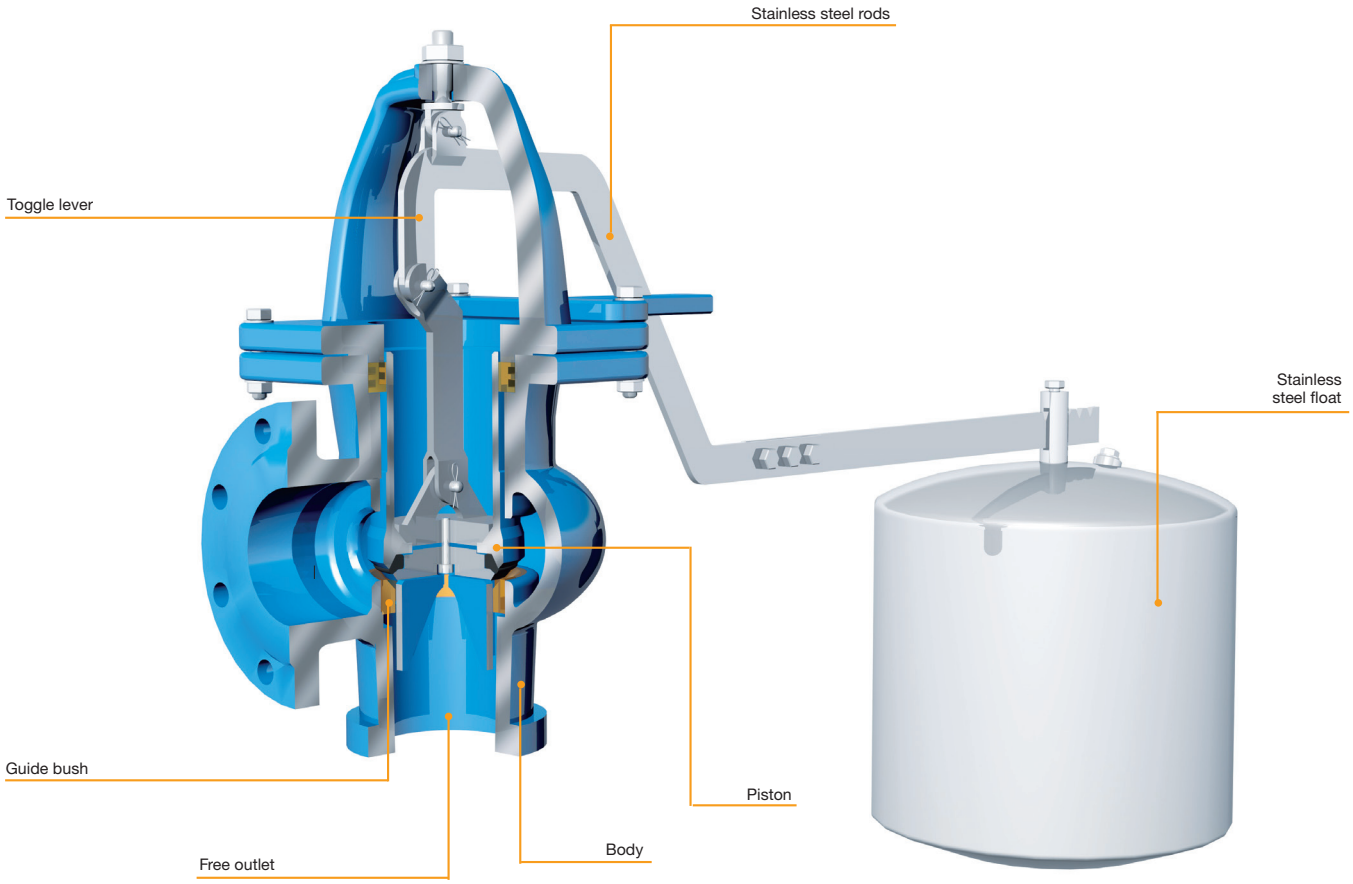

Technical details

- Nominal pressure: PN 10 / PN 16
- Nominal diameter: DN 40...DN 500
- Field of application: Water
- Standard model: Float and float rod made of 1.4301 stainless steel, body and bonnet made of EN-JS 1030 (GGG-40) ductile iron, direct floater actuation
- For dynamic upstream pressures of up to 2 bar
- Inside and outside epoxy coating
- Linear characteristic control curve of the valve

Product features

- Angle-type control valve for level control in water tanks.
- Low operating forces through pressure-balanced valve piston.
- Direct float actuation.
- Shockproof closing for rising water levels.

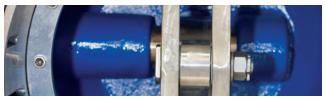

VAG DURA Control Valve

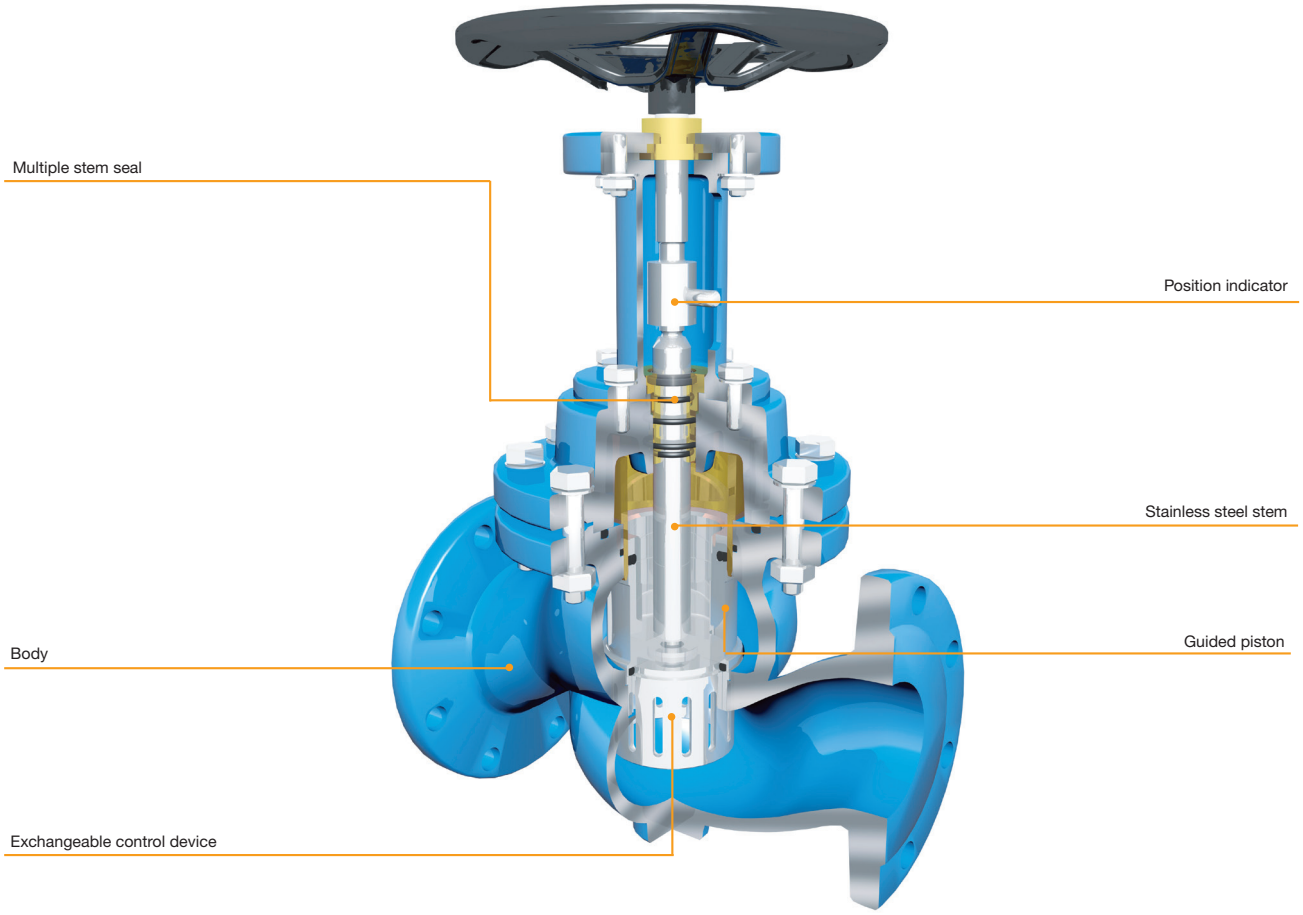

Technical details

- Nominal pressure: PN 16 / PN 25
- Nominal diameter: DN 40...DN 150
- Field of application: Water
- Standard model: Casing and bonnet made of EN-JS 1030 (GGG-40) ductile iron, stem with external thread, piston, seat bush and stem made of 1.4021 stainless steel, valve seal made of NBR, with a handwheel, position indicator and valve piston as a control device with a slotted cylinder
- Inside and outside epoxy coating
- Versions
  - Prepared to be driven electrically
  - With an electrical actuator
  - Customised control devices

Product features

- Globe valve type.
- Low operating forces through pressure-balanced valve piston.
- Control devices individually exchangeable according to operating conditions.
- Valve piston as a control device with a slotted cylinder for an adjustable characteristic control curve to suit the system.
- Cavitation-free operation with an optimal design.
- Easy maintenance.
- Handwheel design can easily be retrofitted and converted to an electric drive model.

VAG DURA SV Control Valve

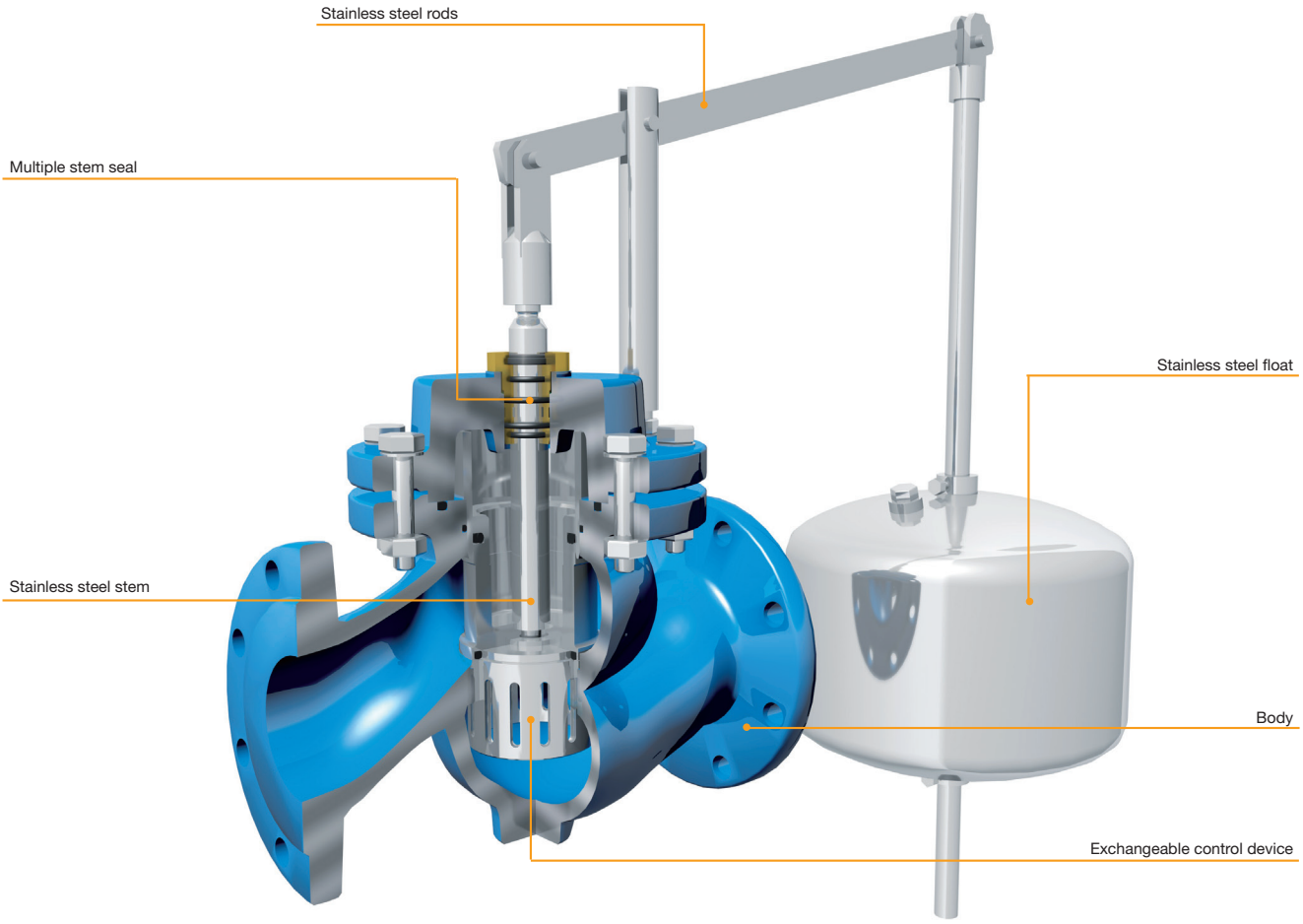

Technical details

- Nominal pressure PN 16
- Nominal diameter: DN 40...DN 150
- Field of application: Water
- Standard model: Body and bonnet made of EN-JS 1030 (GGG-40) ductile iron, piston, seat bush, float and float rod made of 1.4021 stainless steel, piston and stem guide made of bronze, valve seal made of NBR, with a position indicator, valve piston as a control device with a slotted cylinder and direct floater actuation
- Inside and outside epoxy coating
- Models and special versions
  - Pipeline flange with a float actuating system
    - With auxiliary reservoir and auxiliary valve
    - Float operation with rods and support bracket
    - Float operation with cable control
    - With an angle lever for vertical valve installation
  - Cover flange with a float actuating system
    - With an angle lever for vertical valve installation
  - Body flange
    - With an angle lever for vertical valve installation

Product features

- Globe valve type for level control in water tanks.
- Valve piston as a control device with a slotted cylinder for an adjustable characteristic control curve to suit the system.
- Low operating forces through pressure-balanced valve piston.
- Control devices individually exchangeable according to operating conditions.
- Cavitation-free operation with an optimal design.
- Float rod guide provided by customer.

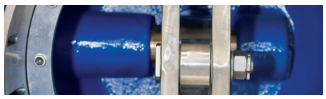

Reference projects

Doosti Mashad dam / Iran

10 VAG PICO® Pilot Operated Control Valve
7 VAG RIKO® Plunger Valves

Liuj hydropower plant / China

1 VAG KSS Hollow-Jet Discharge Valve

Leibis Lichte reservoir / Germany

3 VAG RIKO® Plunger Valves

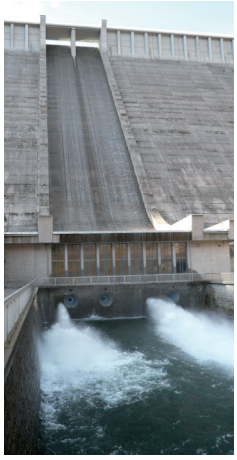

Asahan hydropower plant / Indonesia

1 VAG KSS Hollow-Jet Discharge Valve

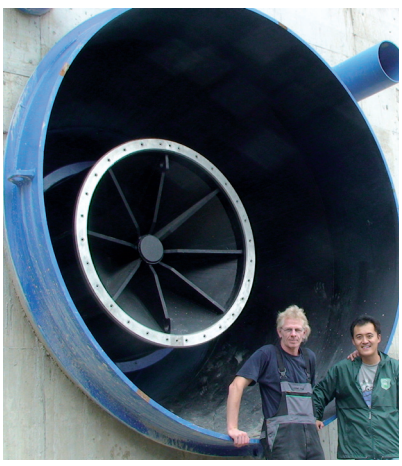

VAG

www.vag-group.com
info@vag-group.com

Edition 1_January_2012