VAG Butterfly Valves

VAG EKN® Butterfly Valve

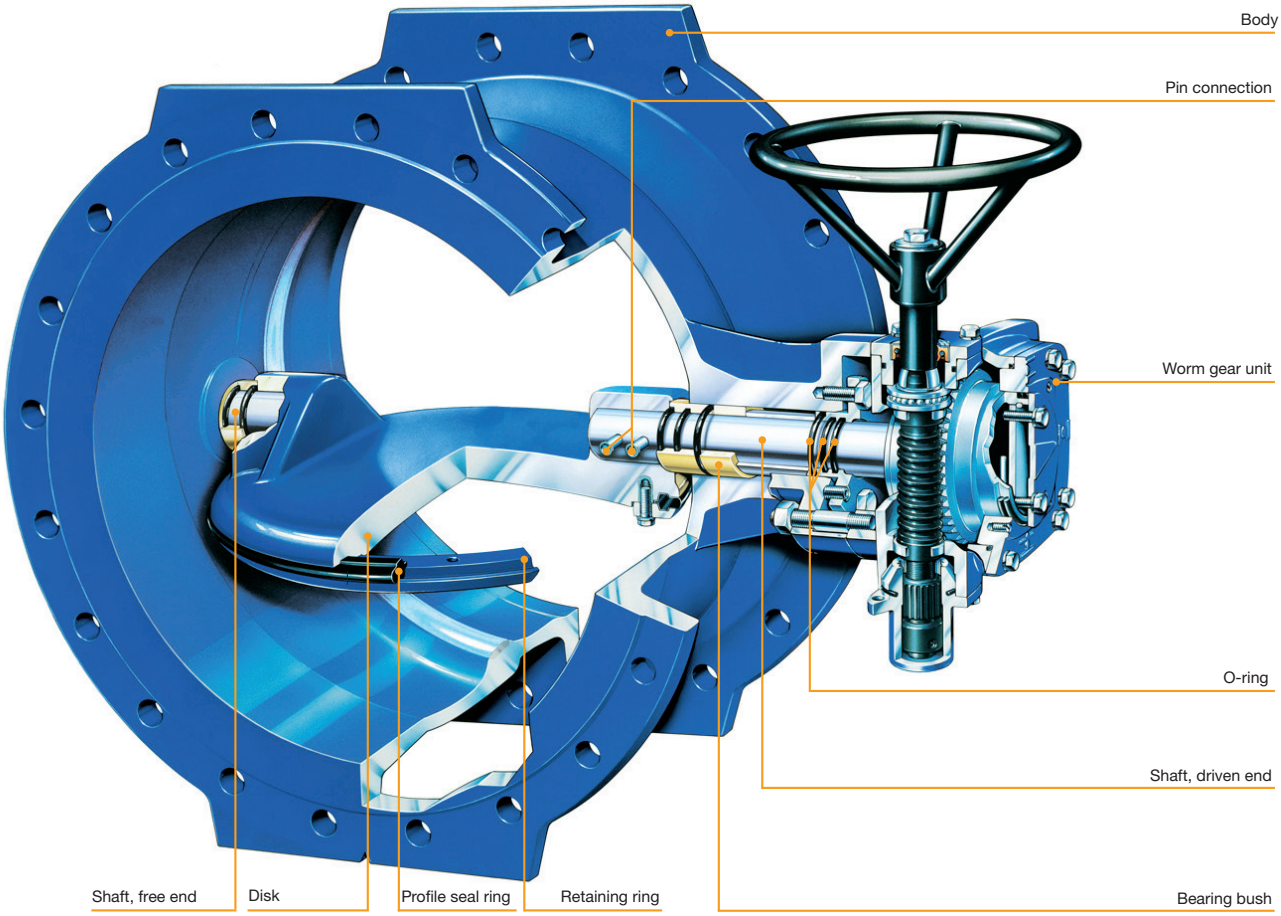

Technical Details

- Pressure range PN 6...PN 40
- Nominal dimensions DN 100...DN 4000
- Field of application: Water, sea water, hot water, gas
- Short and long face-to-face length
- Standard version: With worm gear unit, Body and disk of ductile cast iron EN-JS 1030 (GGG-40)
- Actuator types:
  - With handwheel
  - With electric actuator
  - With hydraulic actuator
  - With pneumatic actuator
- With brake and lift unit as safety valve
- Epoxy coating acc. to GSK quality guidelines
- Special versions:
  - Steel welded
  - With welding-ends
  - Operational temperature up to 200 °C
  - Rubber-lined version
  - Elastomer for other applications NBR, Viton
  - Coating: Inside true email
  - Coating: Outside prime enamel with epoxy coating

Product Characteristics

- The stainless steel shafts are completely enclosed by an O-ring sealing and closed bearing lugs. This protects the whole bearing optimally from corrosion.
- The self-lubricating properties of the bronze bearing bushes guarantee a long and safe service life.
- Wear-resistant, anticorrosive and infiltration safe seat.
- Automatic closing system in the seat. The operating pressure increases the sealing force in both flow directions.
- The pronounced sealing profile retains the profile sealing ring sturdy between the disk and the retaining ring.
  No risk that the profile sealing ring will be pulled out even at high gap flow speeds.
- Advantages of the double eccentric shaft bearing:
  - Optimal gasket retraction into the seat
  - Considerable reduction of the shear stress on the profile sealing ring
  - High service life due to low wear and tear on the profile sealing ring
  - High sealing force and low operating torques
  - Relief of the sealing ring in open position
  - The sealing line is not interrupted by shaft bearings
  - The sealing ring can be exchanged in open position

VAG CEREX® 300 Butterfly Valve

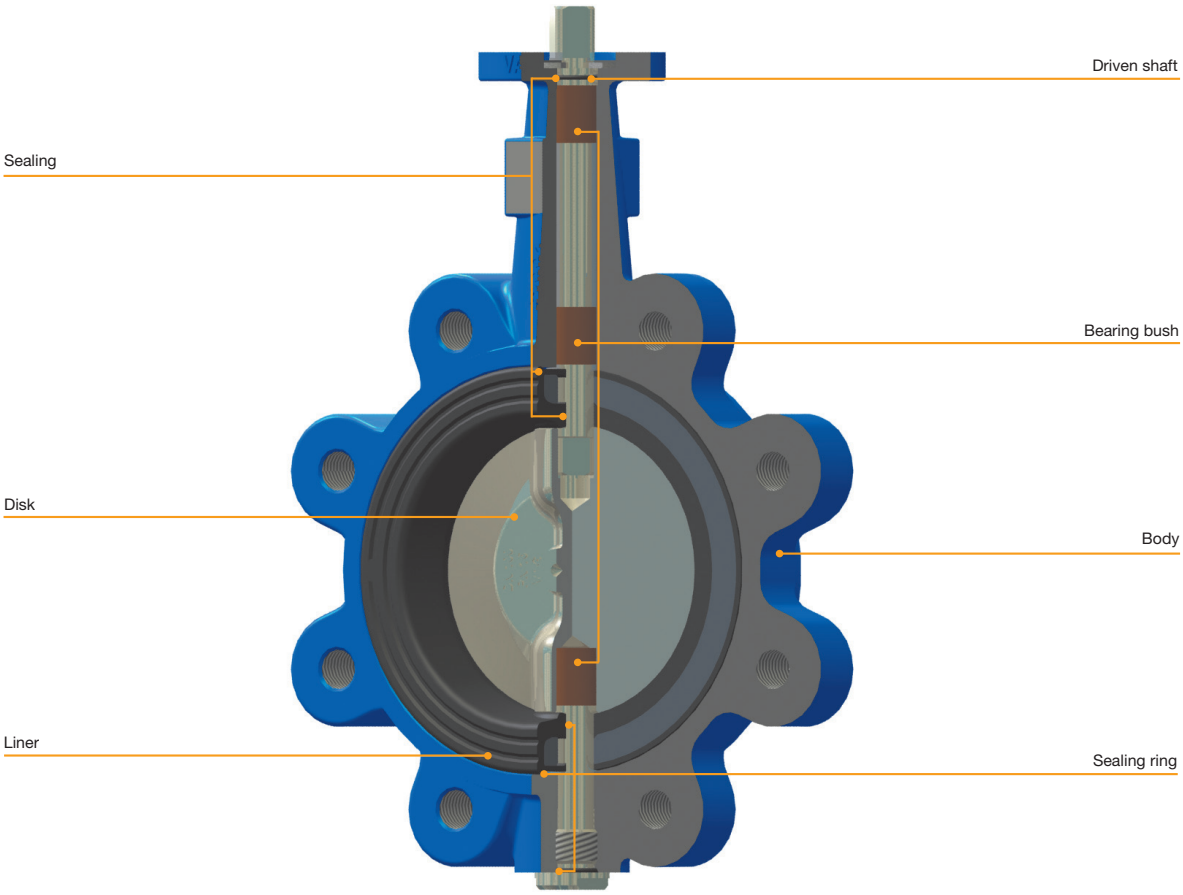

Technical Details

- Pressure range PN 10 / PN 16
- Nominal dimensions DN 50...DN 600
- Field of application: Water, waste water, gas
- Wafer- and Lug-Type
- Short face-to-face length
- Standard version: With bare shaft and actuator flange connection acc. to ISO 5211, body of ductile cast iron EN-JS 1030 (GGG-40), disk stainless steel 1.4408, liner EPDM
- Actuator types:
  - With notch hand lever
  - With worm gear and handwheel
  - With electric actuator
  - With pneumatic actuator
- Epoxy coating
- Special versions:
  - Disk of ductile cast iron EN-JS 1030 (GGG-40), epoxy coating
  - Liner NBR

Product Characteristics

- Variable use as end of-line valve in version Lug-Type or as connection valve installed between pipelines in version Wafer-Type.
- The square shaft connection and actuator flange acc. ISO 5211 enable the different actuator elements to be safely and directly connected.
- The shaft and the body cover are built as one component, creating a very stable construction.
- The two-shaft version ensures low pressure loss in open position of the disk.
- The shaft bearing by triple plastic slide bearings provides low operating torques and maximum stiffness even after many load cycles.
- Unattenuated, blow-out-proof drive shaft and triple external O-ring sealing ensure the valve operates reliably and safely.
- The interchangeable rubber liner with integrated lip sealing provide for a fail-safe operation in flared flanges, welded flanges, PE flanges and individual V-collar flanges.
- The liner with vulcanised retaining ring guarantees a stable seat sealing and permanently low operating torques.

Reference projects

Staaken Waterworks, Germany

56 VAG EKN® Butterfly Valves with FESTO pneumatic actuator

15 VAG EKN® Butterfly Valves customised, with handwheel

9 VAG CEREX® Butterfly Valves with FESTO pneumatic actuator

2 VAG CEREX® Butterfly Valves with handwheel

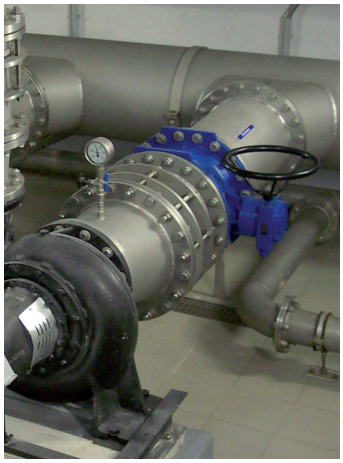

Kleine Kinzig drinking water reservoir, Germany

58 VAG CEREX® Butterfly Valves with FESTO pneumatic actuator

22 VAG CEREX® Butterfly Valves with handwheel

3 VAG EKN® Butterfly Valves with handwheel

1 VAG EKN® Butterfly Valve with electric actuator

Leibis-Lichte Dam, Germany

21 VAG EKN® Butterfly Valves with hydraulic and electric actuator

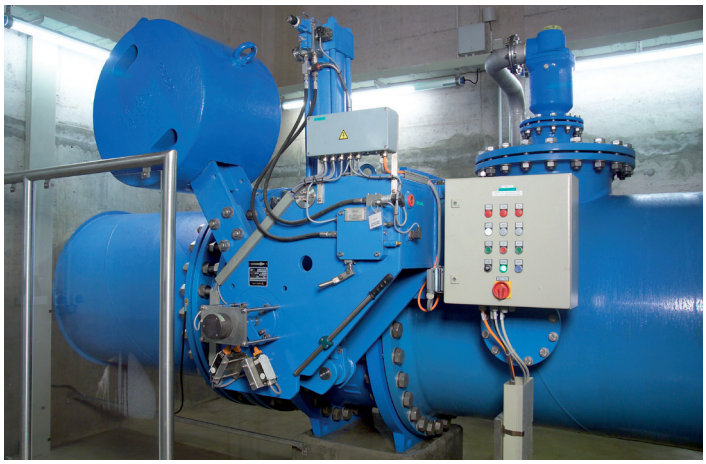

Brändbach Dam, Germany

4 VAG EKN® Butterfly Valves with hydraulic and electric actuator

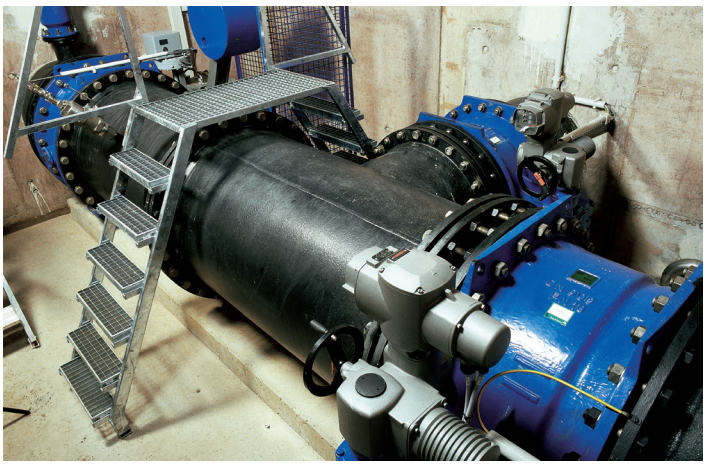

VAG

www.vag-group.com
info@vag-group.com

Edition 2_02-2012