VAG DUOJET® Automatic Air Valve
compact & powerful

VAG DUOJET®
Automatic Air Valve

The name DUOJET is deduced from the two steps (DUO) and the high critical air speeds (JET) that can be reached.
This concept and the respective constructive design of smallest sizes allow to reach far more higher performances than the conventional double-chamber air venting valves.

Range of application

The VAG DUOJET Automatic Air Valve is suitable for drinking water up to 50°C (122°F). It can be delivered with nominal diameter DN 50...200 and pressure rating PN 10...25.
For further details please see KAT 1912-A.

Advantages

- compact design
- higher performances than double-chamber air venting valves
- only few single parts
- no non-ferrous metals - unlimited application field
- all inside metal parts are made of stainless materials
- electrostatic plastic coated (EKB)
- gaskets made of EPDM
- countersunk screws made of stainless steel A 4
- test connection, flush connection and screwed connection at the air venting nozzle

Design

The design of the VAG DUOJET Automatic Air Valve is amazingly simple due to the **single-chamber design** working in **two steps**.
The result are only few single parts, whereby all metal parts are of stainless materials. An unlimited field of application can thus be guarantied.
Compared to conventional elastomers, the sealing parts made of EPDM offer the advantage of excellent physical characteristics combined with a high resistance to ageing.
For example, there is no risk of cracking under the influence of ozone. EPDM is resistant to UV-rays and other atmospheric influences.
If required, a flush or test connection and / or a special air or flush water evacuation can be provided by a pipeline connection at the air venting nozzle.

VAG DUOJET®
Automatic Air Valve

Mode of operation

Aeration of the pipeline when emptying and ventilation of the pipeline when filling:

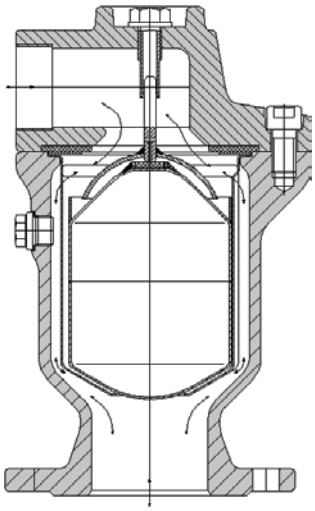

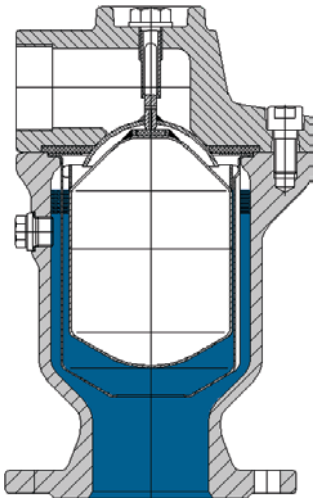

During these processes great pressure differences occur between the smaller internal pressure of the pipeline and the greater external pressure (atmospheric pressure). In order to prevent a bump in the pipeline this one has to be aerated. The shut-off device and the floater automatically fall in the open position due to their own weight.

When filling the pipeline, the air is vented via the great cross section. In this case, the shut-off device and the floater are not torn into the valve seat by the along streaming air due to the constructive design of the valve.

At the end of the filling procedure, the water level rises in the VAG DUOJET Automatic Air Valve. The valve reaches the close position due to the buoyancy of the floater.

Venting the pipeline under full operating pressure:

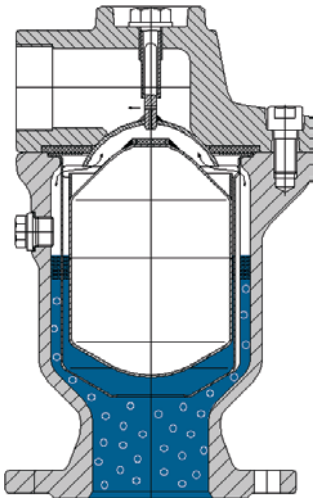

During operation, air penetrates the VAG DUOJET Automatic Air Valve and the water level sinks. The buoyancy of the floater decreases, the floater sinks and thereby opens a small venting hole.

The air can now be vented with high speed. At the same time water flows in again, the buoyancy of the floater increases, the floater rises and closes the small venting hole. During this process the shut-off device remains in the close position due to the internal pressure.

VAG DUOJET®
Automatic Air Valve

You can't do without!

VAG DUOJET Automatic Air Valve
DN 150 - installed at the pumping station
of the treatment plant TIBITOC, Colombia

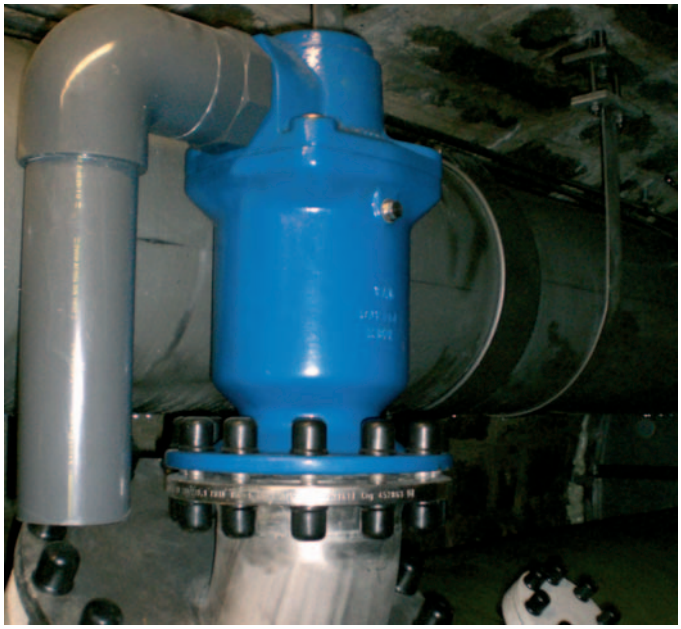

VAG DUOJET Automatic Air Valve
DN 200 - installed at the bottom outlet line
of the Ennepe dam, Germany

VAG-Armaturen GmbH
Carl-Reuther-Str. 1
68305 Mannheim
Germany
Phone +49 621 749-0
Fax +49 621 749-2153
info@vag-armaturen.com
www.vag-armaturen.com

Edition 3-06/2008